STATE OF HAWAII
DEPARTMENT OF DEFENSE
OFFICE OF VETERAN SERVICES

COMMITTAL SHELTER ROOF AND CEILING REPAIRS AND MISCELLANEOUS IMPROVEMENTS

PROJECT NO. CA-1516-C
TAX MAP KEY: 4-5-33:2, 4-5-106:18, 19 & 20
HAWAII STATE VETERANS CEMETERY
45-349 KAMEHAMEHA HWY, KANEOHE, HI 96744

LOCATION MAP

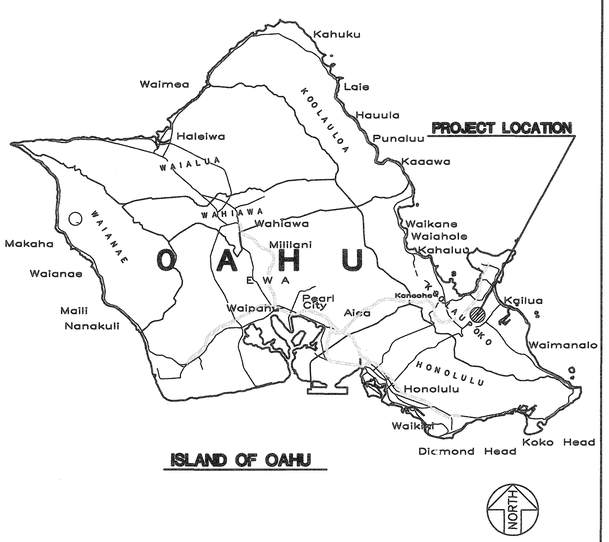

VICINITY MAP

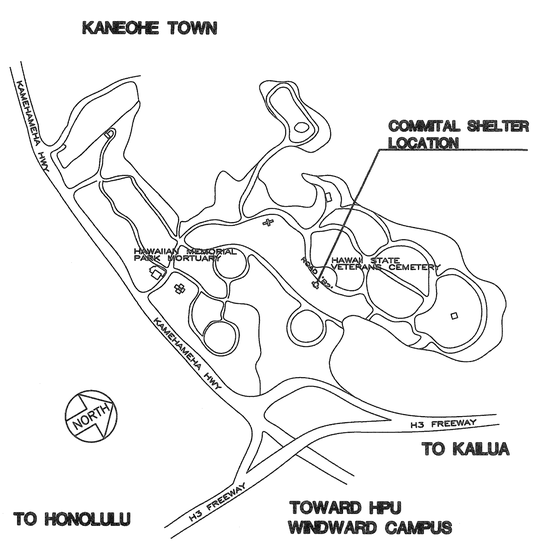

DRAWING INDEX

T-1	TITLE SHEET, LOCATION & VICINITY MAPS, PROJECT DIRECTORY, APPROVALS
T-2	GENERAL NOTES, ABBREVIATIONS
C-1.0	CONSTRUCTION NOTES 1
C-1.1	CONSTRUCTION NOTES 2
C-2.0	SITE PLANS
C-3.0	DETAILS
A-1	DEMO PLANS, DEMO NOTES
A-2	ROOF PLAN, REFLECTED CEILING PLAN, FLOOR PLAN
A-3	EXTERIOR ELEVATIONS
A-4	BUILDING SECTIONS
A-5	DETAILS
S-1	GENERAL NOTES, ROOF FRAMING PLAN, ROOF FRAMING CONNECTION DETAILS
E-1	PARTIAL ELECTRICAL SITE, ELECTRICAL SYMBOL LIST, GEN NOTES, CALCULATIONS
E-2	EXISTING ELECTRICAL PLAN (REMOVAL)
E-3	NEW ELECTRICAL PLAN

APPROVALS

12 APR 16
for ADJUTANT GENERAL, DEPARTMENT OF DEFENSE, STATE OF HAWAII — DATE

11 Apr 16
DIRECTOR, OFFICE OF VETERAN SERVICES, DEPARTMENT OF DEFENSE, STATE OF HAWAII — DATE

11 APR 16
CHIEF ENGINEERING OFFICER, DEPARTMENT OF DEFENSE, STATE OF HAWAII — DATE

PROJECT DIRECTORY

ARCHITECT:
MITSUNAGA & ASSOCIATES
747 AMANA STREET, SUITE 216
HONOLULU, HI 96814

CIVIL:
MITSUNAGA & ASSOCIATES
747 AMANA STREET, SUITE 216
HONOLULU, HI 96814

ENVIRONMENTAL:
ENVIRO SERVICES & TRAINING CENTER, LLC
505 WARD AVENUE, SUITE 202
HONOLULU, HI 96814

ELECTRICAL:
H & O III
1542 YOUNG STREET, SUITE 310
HONOLULU, HI 96814

REVISION NO.	SYM.	DESCRIPTION	SHT. OF.	DATE	APPROVED

STEVEN D. WONG
LICENSED PROFESSIONAL ARCHITECT
No. 4646
HAWAII U.S.A.

THIS WORK WAS PREPARED BY ME OR UNDER MY SUPERVISION AND CONSTRUCTION OF THIS PROJECT WILL BE UNDER MY OBSERVATION. (OBSERVATION OF CONSTRUCTION AS DEFINED IN CHAPTER 16-115, SUBCHAPTER 1 DEFINITIONS, OF THE HAWAII ADMINISTRATIVE RULES, "PROFESSIONAL ENGINEERS, ARCHITECTS, SURVEYORS, AND LANDSCAPE ARCHITECTS")

EXPIRATION DATE: 4-30-16

MITSUNAGA & ASSOCIATES, INC.

STATE OF HAWAII
DEPARTMENT OF DEFENSE
OFFICE OF VETERANS SERVICES

COMMITTAL SHELTER ROOF & CEILING REPAIRS AND MISCELLANEOUS IMPROVEMENTS
HAWAII STATE VETERANS CEMETERY
KANEOHE, OAHU, HAWAII

TITLE, LOCATION MAP, VICINITY MAP, PROJECT DIRECTORY, & APPROVALS

MITSUNAGA & ASSOCIATES, INC.	JOB NO.	DRAWING NO.
	CA-1516-C	T-1
DRAWN BY: A.C.	DATE: FEB. 2016	SHEET 1 of 15
SCALE: AS INDICATED		

GENERAL NOTES

1 THE SCOPE OF WORK FOR THIS PROJECT CONSISTS OF BUT IS NOT LIMITED TO REPAIRS, IMPROVEMENTS, COMPLETE REROOFING AND CEILING REPLACEMENT FOR THE STRUCTURES SHOWN ON THE DRAWINGS AND DESCRIBED IN THE SPECIFICATIONS.

2 ALL WORK SHALL CONFORM TO THE CURRENT BUILDING CODE, LATEST EDITION AND THE AMENDMENTS OF THE CITY & COUNTY OF HONOLULU.

3 SINCE THIS IS A RENOVATION PROJECT, IT SHALL BE THE SOLE RESPONSIBILITY OF THE CONTRACTOR AND HIS SUBCONTRACTORS TO VISIT THE SITE OF WORK TO FULLY FAMILIARIZE THEMSELVES TO THE EXTENT AND INTENT OF THE WORK SHOWN AND DESCRIBED HEREIN.

4 THE CONTRACTOR SHALL NOTIFY AND COORDINATE WITH THE PROJECT MANAGER ANY MAJOR DEVIATIONS FROM THESE PLANS DUE TO UNFORSEEN OR VARYING FIELD CONDITIONS.

5 ANY CHANGES OR MODIFICATIONS SHALL BE APPROVED IN WRITING BY THE PROJECT MANAGER PRIOR TO THE COMMENCEMENT OF NEW OR ADDITIONAL WORK.

6 UNLESS OTHERWISE SPECIFIED, ALL DETAILS AND DIMENSIONS ARE TYPICAL.

7 ALL WORK SHOWN SHALL BE CONSIDERED NEW WORK. ALL MATERIALS INCORPORATED IN THIS PROJECT SHALL BE NEW MATERIALS UNLESS OTHERWISE SPECIFIED.

8 ALL EXPOSED SURFACES DAMAGED DURING THE COURSE OF CONSTRUCTION SHALL BE REPAIRED AND REPAINTED TO MATCH EXISTING ADJACENT SURFACES AT NO ADDITIONAL COST TO THE OWNER.

9 ALL REMEDIAL REPAIR WORK TO EXISTING CONDITIONS IN THE AREA OF NEW WORK SHALL BE INCLUDED AS PART OF THIS CONTRACT.

10 THE CONTRACTOR SHALL COORDINATE ALL WORK WITH THE PROJECT MANAGER. THE CONTRACTOR MUST GIVE WRITTEN NOTICE TO THE PROJECT MANAGER FOR ANY DEVIATION TO THE ESTABLISHED CONSTRUCTION SCHEDULE.

11 THE CONTRACTOR SHALL CLEAN AND PREPARE ALL NEW AND EXISTING SURFACES AS REQUIRED TO RECEIVE NEW WORK OR AS OTHERWISE REQUIRED FOR A NEAT AND FINISHED APPEARANCE.

12 THE CONTRACTOR SHALL CLEAN AND REMOVE FROM THE PREMESIS, FROM TIME TO TIME, ALL DEBRIS ACCUMULATED FROM OPERATION.

ABBREVIATIONS

A

ABV	ABOVE
ACC	ACCESSIBLE
ACOUS	ACOUSTICAL
ADJ	ADJUSTABLE
AFF	ABOVE FINISH FLOOR
AP	ACCESS PANEL
ACT	ACOUSTIC TILE
ALUM.	ALUMINUM
&	AND
∠	ANGLE
@	AT

B

BD	BOARD
BLK'G	BLOCKING
BOT	BOTTOM

C

CER	CERAMIC
CLG	CEILING
CLR	CLEAR
CMU	CONCRETE MASONRY UNIT
COL	COLUMN
CONC	CONCRETE
COND	CONDITION
CONN	CONNECTION
CONT	CONTINUOUS
CORR	CORRIDOR

D

D	DEPTH
DBL	DOUBLE
DET	DETAIL
DIA ø	DIAMETER
DIM	DIMENSION
DISP	DISPENSER
DN	DOWN
DP	DRAIN PIPE
DR	DOOR
DS	DOWN SPOUT
DWG	DRAWING
DWR	DRAWER
DD	DECK DRAIN

E

EG	EXTERIOR GYP. BD.
EJ	EXPANSION JOINT
EL	ELEVATION
ELAS	ELASTOMERIC
ELEC	ELECTRICAL
ENCL	ENCLOSURE
EQ	EQUAL
EXH	EXHAUST
EXIST	EXISTING
EXP	EXPANSION
EXPO	EXPOSED
EXT	EXTERIOR

F

FD	FLOOR DRAIN
FF	FINISH FLOOR
FIN	FINISH
FIXT	FIXTURE
FLR	FLOOR
FLASH	FLASHING
FLRG	FLOORING
FLUOR	FLUORESCENT
FR	FRAME

G

GALV	GALVANIZED
GC	GENERAL CONTRACTOR
GL	GLASS
GYP	GYPSUM
GYPBD	GYPBOARD

H

HC	HOLLOW CORE
HDBD	HARD BOARD
HDWD	HARDWOOD
HDWR	HARDWARE
HT	HEIGHT
HR	HANDRAILING

I

INSUL	INSULATION
INT	INTERIOR

J

JT	JOINT

L

LAM	LAMINATED
LAV	LAVATORY
LT	LIGHT
LLO	LONG LEG OUT

M

MACH	MACHINE
MAX	MAXIMUM
MECH	MECHANICAL
MET	METAL
MFR	MANUFACTURER
MIN	MINIMUM
MTD	MOUNTED
MTG	MOUNTING
MATL	MATERIAL

N

NO	NUMBER
NTS	NOT TO SCALE
NIC	NOT IN CONTRACT

O

OBSC	OBSCURE
OC	ON CENTER
OD	OUTSIDE DIAMETER
OFC	OFFICE
OPNG	OPENING
OVHD	OVERHEAD

P

P	PRINTER
PAVT	PAVEMENT
PLAM	PLASTIC LAMINATE
PLAS	PLASTER
PLYWD	PLYWOOD
PNL	PANEL
PTN	PARTITION
PVC	POLYVINYL CHLORIDE

R

RD	ROOF DRAIN
REC	RECESSED
REFL	REFLECTED
REQD	REQUIRE(D)
RES	RESILIENT
RM	ROOM
RND	ROUND

S

SB	SPLASHBLOCK
SC	SOLID CORE
SCH	SCHEDULE
SD	SOAP DISPENSER
SECT	SECTION
SHT	SHEET
SHTG	SHEATHING
SIM	SIMILAR
SL	SLOPE
SPEC	SPECIFICATION
SQ	SQUARE
SST	STAINLESS STEEL
STD	STANDARD
STO	STORAGE
STRUCT	STRUCTURAL
SUSP	SUSPENDED
SV	SHEET VINYL
SYMM	SYMMETRICAL
SYS	SYSTEM

T

THK	THICK
THRES	THRESHOLD
TMK	TAX MAP KEY
TLT	TOILET
TYP	TYPICAL
T.B.D	TO BE DETERMINED
T&G	TONGUE AND GROVE

V

VTR	VENT THRU ROOF
VERT	VERTICAL

U

UON	UNLESS OTHERWISE NOTED

W

W/	WITH
WC	WATER CLOSET
WD	WOOD
WDW	WINDOW
W.O.	WHERE OCCURS
WR	WATER RESISTANT
WSCT	WAINSCOT

REVISION NO.	SYM.	DESCRIPTION	SHT. OF.	DATE	APPROVED

STEVEN D. WONG
LICENSED PROFESSIONAL ARCHITECT
No. 4646
HAWAII U.S.A.

THIS WORK WAS PREPARED BY ME OR UNDER MY SUPERVISION AND CONSTRUCTION OF THIS PROJECT WILL BE UNDER MY OBSERVATION. (OBSERVATION OF CONSTRUCTION AS DEFINED IN CHAPTER 16-115, SUBCHAPTER 1 DEFINITIONS, OF THE HAWAII ADMINISTRATIVE RULES, "PROFESSIONAL ENGINEERS, ARCHITECTS, SURVEYORS, AND LANDSCAPE ARCHITECTS")

EXPIRATION DATE: 4-30-16

MITSUNAGA & ASSOCIATES, INC.

STATE OF HAWAII
DEPARTMENT OF DEFENSE
OFFICE OF VETERANS SERVICES

COMMITTAL SHELTER ROOF & CEILING REPAIRS AND MISCELLANEOUS IMPROVEMENTS
HAWAII STATE VETERANS CEMETERY
KANEOHE, OAHU, HAWAII

GENERAL NOTES, ABBREVIATIONS

MITSUNAGA & ASSOCIATES, INC.		JOB NO. CA-1516-C	DRAWING NO. T-2
DRAWN BY: A.C.		DATE: FEB. 2016	SHEET 2 of 15
SCALE: AS INDICATED			

GENERAL CONSTRUCTION NOTES:

1. ALL APPLICABLE CONSTRUCTION WORK SHALL BE DONE IN ACCORDANCE WITH THE STANDARD SPECIFICATIONS FOR PUBLIC WORKS CONSTRUCTION, SEPTEMBER 1986 AND STANDARD DETAILS FOR PUBLIC WORKS CONSTRUCTION, SEPTEMBER 1984, AS AMENDED, OF THE DEPARTMENT OF PUBLIC WORKS, CITY AND COUNTY OF HONOLULU AND THE COUNTIES OF KAUAI, MAUI, AND HAWAII.

2. THE UNDERGROUND PIPES, CABLES OR DUCTLINES KNOWN TO EXIST FROM SEARCH OF RECORDS ARE INDICATED ON THE PLANS. THE CONTRACTOR SHALL VERIFY THE LOCATIONS AND DEPTHS OF THE FACILITIES AND EXERCISE PROPER CARE IN EXCAVATING IN THE AREA. WHEREVER CONNECTIONS OF NEW UTILITIES TO EXISTING UTILITIES ARE SHOWN ON THE PLANS, THE CONTRACTOR SHALL EXPOSE THE EXISTING LINES AT THE PROPOSED CONNECTIONS TO VERIFY THEIR LOCATIONS AND DEPTHS PRIOR TO EXCAVATION FOR THE NEW LINES.

3. NO CONTRACTOR SHALL PERFORM ANY CONSTRUCTION OPERATION SO AS TO CAUSE FALLING ROCKS, SOIL OR DEBRIS IN ANY FORM TO FALL, SLIDE OR FLOW INTO EXISTING DRAINAGE SYSTEMS, OR ADJOINING PROPERTIES, STREETS OR NATURAL WATERCOURSES. SHOULD SUCH VIOLATIONS OCCUR, THE CONTRACTOR MAY BE CITED AND THE CONTRACTOR SHALL IMMEDIATELY MAKE ALL REMEDIAL ACTIONS NECESSARY.

4. THE GENERAL CONTRACTOR OF THE PROJECT SHALL BE RESPONSIBLE FOR CONFORMANCE WITH APPLICABLE PROVISIONS OF THE HAWAII ADMINISTRATIVE RULE, TITLE 11, CHAPTER 54, "WATER QUALITY STANDARDS," AND TITLE, CHAPTER 55, "WATER POLLUTION CONTROL," AS WELL AS CHAPTER 14 OF THE REVISED ORDINANCES OF HONOLULU, AS AMENDED. BEST MANAGEMENT PRACTICES SHALL BE EMPLOYED AT ALL TIMES DURING CONSTRUCTION.

   IN ACCORDANCE WITH STATE LAW, ALL DISCHARGES RELATED TO PROJECT CONSTRUCTION OR OPERATIONS ARE REQUIRED TO COMPLY WITH STATE WATER QUALITY STANDARDS (HAWAII ADMINISTRATIVE RULES, CHAPTER 11-54). BEST MANAGEMENT PRACTICES SHALL BE USED TO MINIMIZE OR PREVENT THE DISCHARGE OF SEDIMENT, DEBRIS, AND OTHER POLLUTANTS TO STATE WATERS.

5. THE CONTRACTOR SHALL SUBMIT A BMP CONSTRUCTION PLAN TO THE PROJECT MANAGER FOR APPROVAL THE BMP PLAN SHALL DESCRIBE ALL BMP'S TO BE USED IN ALL PORTIONS OF THE PROJECT.

6. PURSUANT TO CHAPTER 6E, HRS, IN THE EVENT ANY ARTIFACTS OR HUMAN REMAINS ARE UNCOVERED DURING CONSTRUCTION OPERATIONS, THE CONTRACTOR SHALL IMMEDIATELY SUSPEND WORK AND NOTIFY THE HONOLULU POLICE DEPARTMENT, THE STATE DEPARTMENT OF LAND AND NATURAL RESOURCES-HISTORIC PRESERVATION DIVISION (692-8015).

7. THE EXISTING UTILITIES HAVE BEEN SHOWN ON THESE PLANS INSOFAR AS IT IS POSSIBLE TO DO SO. THEIR LOCATIONS AS SHOWN ARE APPROXIMATE ONLY AND THE CONTRACTOR SHALL MAKE INDEPENDENT CHECK ON THE GROUND BY PROBING AND WITH THE VARIOUS UTILITY COMPANIES AND GOVERNMENTAL AGENCIES TO ASCERTAIN THEIR EXACT LOCATIONS. IF UTILITIES NOT SHOWN ARE SUSPECTED, REQUIRE TONING OF THESE AREAS PRIOR TO EXCAVATION TO LOCATE THEM.

8. THE CONTRACTOR SHALL PROTECT ALL EXISTING UTILITIES WHETHER SHOWN ON THE PLANS OR NOT. BEFORE DISRUPTING SERVICE OF ANY UTILITY, THE CONTRACTOR SHALL CONTACT THE PROJECT MANAGER AND APPROPRIATE RESPONSIBLE UTILITY AUTHORITY. DAMAGE TO EXISTING UTILITIES AS A RESULT OF CONSTRUCTION ACTIVITIES SHALL BE REPAIRED BY THE CONTRACTOR AT NO ADDITIONAL COST TO THE STATE.

9. THE CONTRACTOR MAY ARRANGE WITH THE PROJECT MANAGER TO USE ON-SITE WATER & ELECTRICITY.

10. ALL EXISTING UTILITIES TO REMAIN IN USE, WHETHER OR NOT SHOWN ON THE PLANS, SHALL BE PROTECTED AT ALL TIMES BY THE CONTRACTOR DURING CONSTRUCTION UNLESS SPECIFIED ON THE PLANS TO BE ABANDONED. ANY DAMAGE TO THE EXISTING UTILITIES SHALL BE REPAIRED AND PAID FOR BY THE CONTRACTOR.

11. UNLESS RELOCATION IS CALLED FOR ON THE PLANS, EXISTING UTILITIES SHALL REMAIN IN-SERVICE AND IN PLACE. IF RELOCATION OF EXISTING UTILITIES IS REQUIRED FOR THE CONTRACTOR'S CONVENIENCE, INTERRUPTION OF SERVICE SHALL BE KEPT TO A MINIMUM AND SHALL BE DONE AT THE CONTRACTOR'S EXPENSE AND ONLY WITH THE APPROVAL OF THE PROJECT MANAGER.

12. THE CONTRACTOR SHALL VERIFY AND CHECK ALL DIMENSIONS AND DETAILS SHOWN ON THE DRAWINGS PRIOR TO THE START OF CONSTRUCTION. ANY DISCREPANCY SHALL BE IMMEDIATELY BROUGHT TO THE ATTENTION OF THE PROJECT MANAGER FOR CLARIFICATION.

13. THE EXISTING IMPROVEMENTS ON THE PREMISES AND IN ADJACENT AREA THAT ARE NOT TO BE REMOVED, SHALL BE PRESERVED AND PROTECTED. ANY AND ALL DAMAGES RESULTING FROM THE CONTRACTOR'S CONSTRUCTION OPERATION SHALL BE REPLACED AND REPAIRED TO ORIGINAL CONDITION, AT NO ADDITIONAL COST TO THE STATE/OWNER.

14. THE CONTRACTOR SHALL BE RESPONSIBLE FOR CLEANING AND RESTORATION TO ORIGINAL OR BETTER CONDITION, NEARBY IMPROVEMENTS AFFECTED BY DUST AND/OR OTHER REASONS RESULTING FROM THE CONSTRUCTION ACTIVITY.

15. IT SHALL BE THE CONTRACTOR'S RESPONSIBILITY TO NOTIFY THE PROJECT MANAGER FOR ANY AND ALL DISCREPANCIES FOUND ON THE DRAWINGS OR SPECIFICATIONS PRIOR TO THE BID OPENING. ANY DISCREPANCIES OR QUESTIONS RAISED AFTER THE BID OPENING THAT MAY RESULT IN EXTRA COST SHALL BE BORNE BY THE CONTRACTOR.

I N D E X

CIVIL:	SHEET NO.
CONSTRUCTION NOTES 1	C-1.0
CONSTRUCTION NOTES 2	C-1.1
SITE PLANS	C-2.0
DETAILS	C-3.0

REVISION NO.	SYM.	DESCRIPTION	SHT. OF.	DATE	APPROVED

CHAD M. MCDONALD
LICENSED PROFESSIONAL ENGINEER
No. 9793-C
HAWAII, U.S.A.

This work was prepared by me or under my supervision

4/30/2016
MITSUNAGA & ASSOCIATES, INC. EXP. DATE

NOTE: Contractor to check and verify dimensions at job before proceeding with work.

STATE OF HAWAII
DEPARTMENT OF DEFENSE
OFFICE OF VETERANS SERVICES

COMMITTAL SHELTER ROOF & CEILING REPAIRS
AND
MISCELLANEOUS IMPROVEMENTS
HAWAII STATE VETERANS CEMETERY
KANEOHE, OAHU, HAWAII

CONSTRUCTION NOTES 1

MITSUNAGA & ASSOCIATES, INC.	JOB NO. CA-1516-C	DRAWING NO. C-1.0
DRAWN BY: CB	DATE: MARCH 2016	SHEET 3 of 15
SCALE: AS INDICATED		

GRADING NOTES

1. ALL GRADING WORK SHALL BE DONE IN ACCORDANCE WITH CHAPTER 14, ARTICLES 13, 14, 15 AND 16, AS RELATED TO GRADING, SOIL EROSION AND SEDIMENT CONTROL OF THE REVISED ORDINANCES OF HONOLULU, 1990, AS AMENDED.
2. NO CONTRACTOR SHALL PERFORM ANY GRADING OPERATION SO AS TO CAUSE FALLING ROCKS, SOIL OR DEBRIS IN ANY FORM TO FALL, SLIDE OR FLOW ONTO ADJOINING PROPERTIES, STREETS OR NATURAL WATERCOURSES. SHOULD SUCH VIOLATIONS OCCUR, THE CONTRACTOR MAY BE CITED AND THE CONTRACTOR SHALL IMMEDIATELY MAKE ALL REMEDIAL ACTIONS NECESSARY.
3. THE CONTRACTOR, AT HIS OWN EXPENSE, SHALL KEEP THE PROJECT AREA AND SURROUNDING AREA FREE FROM DUST NUISANCE. THE WORK SHALL BE IN CONFORMANCE WITH THE AIR POLLUTION CONTROL STANDARDS CONTAINED IN THE HAWAII ADMINISTRATIVE RULES, TITLE 11, CHAPTER 60.1, "AIR POLLUTION CONTROL".
4. ADEQUATE PROVISIONS SHALL BE MADE TO PREVENT SURFACE WATERS FROM DAMAGING THE CUT FACE OF AN EXCAVATION OR THE SLOPED SURFACES OF A FILL. FURTHERMORE, ADEQUATE PROVISIONS SHALL BE MADE TO PREVENT SEDIMENT–LADEN RUNOFF FROM LEAVING THE SITE.
5. ALL SLOPES AND EXPOSED AREAS SHALL BE SODDED OR PLANTED AS SOON AS FINAL GRADES HAVE BEEN ESTABLISHED. PLANTING SHALL NOT BE DELAYED UNTIL ALL GRADING WORK HAS BEEN COMPLETED. GRADING TO FINAL GRADE SHALL BE CONTINUOUS, AND ANY AREA WITHIN WHICH WORK HAS BEEN INTERRUPTED OR DELAYED SHALL BE PLANTED.
6. THE LIMITS OF THE AREA TO BE GRADED SHALL BE FLAGGED BEFORE THE COMMENCEMENT OF THE GRADING WORK.
7. ALL GRADING OPERATIONS SHALL BE PERFORMED IN CONFORMANCE WITH THE APPLICABLE PROVISIONS OF THE WATER QUALITY AND WATER POLLUTION CONTROL STANDARDS CONTAINED IN HAWAII ADMINISTRATIVE RULES, TITLE 11, CHAPTER 54, "WATER QUALITY STANDARDS", AND TITLE 11, CHAPTER 55, "WATER POLLUTION CONTROL".
8. WHERE APPLICABLE AND FEASIBLE THE MEASURES TO CONTROL EROSION AND OTHER POLLUTANTS SHALL BE IN PLACE BEFORE ANY EARTH MOVING PHASE OF THE GRADING IS INITIATED.
9. TEMPORARY EROSION CONTROLS SHALL NOT BE REMOVED BEFORE PERMANENT EROSION CONTROLS ARE IN–PLACE AND ESTABLISHED.
10. IF THE GRADING WORK INVOLVES CONTAMINATED SOIL, THEN ALL GRADING WORK SHALL BE DONE IN CONFORMANCE WITH APPLICABLE STATE AND FEDERAL REQUIREMENTS.
11. PURSUANT TO CHAPTER 6E, HRS, IN THE EVENT ANY ARTIFACTS OR HUMAN REMAINS ARE UNCOVERED DURING CONSTRUCTION OPERATIONS, THE CONTRACTOR SHALL IMMEDIATELY SUSPEND WORK AND NOTIFY THE HONOLULU POLICE DEPARTMENT, THE STATE DEPARTMENT OF LAND AND NATURAL RESOURCES–HISTORIC PRESERVATION DIVISION (692–8015).
12. ALL GRADING AND CONSTRUCTION WORK SHALL IMPLEMENT MEASURES TO ENSURE THAT THE DISCHARGE OF POLLUTANTS FROM THE CONSTRUCTION SITE WILL BE REDUCED TO THE MAXIMUM EXTENT PRACTICABLE AND WILL NOT CAUSE OR CONTRIBUTE TO AN EXCEEDANCE OF WATER QUALITY STANDARDS.
13. NON–COMPLIANCE TO ANY OF THE ABOVE REQUIREMENTS SHALL MEAN IMMEDIATE SUSPENSION OF ALL WORK, AND REMEDIAL WORK SHALL COMMENCE IMMEDIATELY. ALL COSTS INCURRED SHALL BE BILLED TO THE VIOLATOR. FURTHERMORE, VIOLATORS SHALL BE SUBJECTED TO ADMINISTRATIVE, CIVIL AND/OR CRIMINAL PENALTIES.

PUBLIC HEALTH SAFETY & CONVENIENCE NOTES

1. THE CONTRACTOR SHALL OBSERVE AND COMPLY WITH ALL FEDERAL, STATE AND LOCAL LAWS REQUIRED FOR THE PROTECTION OF PUBLIC HEALTH, SAFETY AND ENVIRONMENTAL QUALITY.
2. THE CONTRACTOR, AT HIS OWN EXPENSE, SHALL KEEP THE PROJECT AND ITS SURROUNDING AREAS FREE FROM DUST NUISANCE. THE WORK SHALL BE IN CONFORMANCE WITH THE AIR POLLUTION STANDARDS AND REGULATIONS OF THE STATE DEPARTMENT OF HEALTH.
3. THE CONTRACTOR SHALL PROVIDE, INSTALL AND MAINTAIN ALL NECESSARY SIGNS, LIGHTS, FLARES, BARRICADES, MARKERS, CONES AND OTHER PROTECTIVE FACILITIES AND SHALL TAKE ALL NECESSARY PRECAUTIONS FOR THE PROTECTION, CONVENIENCE AND SAFETY OF THE PUBLIC.
4. THE CONTRACTOR'S ATTENTION IS DIRECTED TO TITLE 11, DEPARTMENT OF HEALTH, CHAPTER 46, COMMUNITY NOISE CONTROL, IN WHICH MAXIMUM ALLOWABLE NOISE LEVELS HAVE BEEN SET. IF THE CONSTRUCTION WILL BE REQUIRED TO OBTAIN A PERMIT FROM THE DIRECTOR OF THE DEPARTMENT OF HEALTH, THE CONTRACTOR SHALL OBTAIN A COPY OF CHAPTER 46 AND BECOME FAMILIAR WITH THE NOISE LEVEL RESTRICTIONS AND THE PROCEDURES FOR OBTAINING A PERMIT FOR CONSTRUCTION ACTIVITIES. APPLICATION AND INFORMATION ON VARIANCES FROM THE ENVIRONMENTAL HEALTH SERVICES DIVISION, 591 ALA MOANA BLVD., RM. 125, HONOLULU, HAWAII OR BY TELEPHONE 586–4576.
5. WHERE PEDESTRIAN WALKWAYS EXIST, THEY SHALL BE MAINTAINED IN PASSABLE CONDITION OR OTHER FACILITIES FOR PEDESTRIANS SHALL BE PROVIDED. TEMPORARY PASSAGE WAYS SHALL BE ACCESSIBLE AND COMPLY WITH THE GUIDELINES BELOW;
   A. ADAAG 201.3 TEMPORARY AND PERMANENT STRUCTURES. THESE REQUIREMENTS SHALL APPLY TO TEMPORARY AND PERMANENT BUILDINGS AND FACILITIES
   B. ADAAG 206.1 GENERAL. ACCESSIBLE ROUTES SHALL BE PROVIDED IN ACCORDANCE WITH 206 AND SHALL COMPLY WITH CHAPTER 4.
6. CONTRACTOR SHALL TEMPORARILY SUSPEND WORK DURING BURIAL/MEMORIAL SERVICES AND RELATED ACTIVITIES, AS DIRECTED BY THE CEMETERY MANAGER. BURIALS OCCUR, ON AVERAGE, THREE (3) TIMES PER DAY. WITH EACH BURIAL HAVING AN APPROX. DURATION OF 20 TO 30 MINUTES. THE CONTRACTOR SHALL INCLUDED THE COST OF SUCH STOPPAGES OF WORK IN THE BID AMOUNT. NO ADDITIONAL COMPENSATION WILL BE PROVIDED FOR THE CONTRACTORS LACK OF ACCOMMODATING SUCH STOPPAGES IN THEIR BID.
7. THE CEMETERY RESTROOM FACILITY WILL BE AVAILABLE FOR USE DURING CONSTRUCTION. THE FACILITIES SHALL BE KEPT CLEAN AND MAINTAINED IN A CONDITION ACCEPTABLE WITH THE CEMETERY MANAGER. ABUSE OF THIS PRIVILEGE WILL RESULT IN THE REVOCATION OF THE USE OF THE FACILITIES, AND THE CONTRACTOR WILL BE REQUIRED TO PROVIDE TEMPORARY FACILITIES AT NO ADDITIONAL COST TO THE STATE.

ABBREVIATIONS:

AC	ASPHALTIC CONCRETE
ADA	AMERICANS WITH DISABILITIES ACT
&	AND
APPROX	APPROXIMATE, APPROXIMATELY
ASTM	AMERICAN SOCIETY FOR TESTING MATERIALS
@	AT
B, BOT	BOTTOM
BW	BOTTOM OF WALL
BWS	BOARD OF WATER SUPPLY
BC	BOTTOM OF CURB
CONN	CONNECT, CONNECTION
℄	CENTERLINE
CONC	CONCRETE
CONT	CONTINUE, CONTINUOUS
COTG	CLEAN OUT TO GRADE
CY	CUBIC YARD
DET	DETAIL
DIA	DIAMETER
DI	DRAIN INLET
DMH	DRAIN MANHOLE
DPP	DEPARTMENT OF PLANNING & PERMITTING
DPW	DEPARTMENT OF PUBLIC WORKS
DS	DOWN SPOUT
DWG	DRAWING
EA	EACH
ELEC	ELECTRIC, ELECTRICAL
EP	EDGE OF PAVEMENT
ELEV, EL	ELEVATION
EQ	EQUAL
EW	EACH WAY
EXIST	EXISTING
EX.TC	EXISTING TOP OF CURB
EX.BC	EXISTING BOTTOM OF CURB
FT	FOOT, FEET
FH	FIRE HYDRANT
FFE	FINISH FLOOR ELEVATION
FG	FINISH GRADE
GALV	GALVANIZED
GV	GATE VALVE
HORIZ	HORIZONTAL
HP	HIGH POINT
ID	INSIDE DIAMETER
INV	INVERT
LAT	LATERAL
LF	LINEAR FOOT
LB(S)	POUND(S)
MAX	MAXIMUM
MH	MANHOLE
MISC	MISCELLANEOUS
MIN	MINIMUM
N	NORTH
NTS	NOT TO SCALE
NO	NUMBER
OC	ON CENTER
OD	OUTSIDE DIAMETER
O/S	OFFSET
PCC	PORTLAND CEMENT CONCRETE
PAV'T	PAVEMENT
PSF	POUNDS PER SQUARE FOOT
PI	POINT OF INTERSECTION
PL	PROPERTY LINE, PLACE
PVC	POLYVINYL CHLORIDE
PJF	PRE–MOLDED JOINT FILLER
R	RADIUS
REQ'D	REQUIRED
REINF	REINFORCEMENT
REV	REVISION/REVISED
SCH	SCHEDULE
SF	SQUARE FOOT
SHT	SHEET
SL	SEWER LINE
SMH	SEWER MANHOLE
SPEC	SPECIFICATION
SQ	SQUARE
SST	STAINLESS STEEL
STA	STATION
STD	STANDARD
SY	SQUARE YARD
T	TOP
THK	THICK
TOF	TOP OF FOOTING
TW	TOP OF WALL
TC	TOP OF CURB
TS	TOP OF STAIR
TYP	TYPICAL
VB	VALVE BOX
VERT	VERTICAL
W	WATER
WL	WATERLINE
WMH	WATER MANHOLE
WM	WATER METER
WV	WATER VALVE
WWF	WELDED WIRE FABRIC

REVISION NO.	SYM.	DESCRIPTION	SHT. OF.	DATE	APPROVED

CHAD M. MCDONALD
LICENSED PROFESSIONAL ENGINEER
No. 9793-C
HAWAII, U.S.A.

This work was prepared by me or under my supervision

4/30/2016
MITSUNAGA & ASSOCIATES, INC. EXP. DATE

NOTE: Contractor to check and verify dimensions at job before proceeding with work.

STATE OF HAWAII
DEPARTMENT OF DEFENSE
OFFICE OF VETERANS SERVICES

COMMITTAL SHELTER ROOF & CEILING REPAIRS AND MISCELLANEOUS IMPROVEMENTS
HAWAII STATE VETERANS CEMETERY
KANEOHE, OAHU, HAWAII

CONSTRUCTION NOTES 2

MITSUNAGA & ASSOCIATES, INC.	JOB NO. CA-1516-C	DRAWING NO. C-1.1
DRAWN BY: CB	DATE: MARCH 2016	SHEET 4 of 15
SCALE: AS INDICATED		

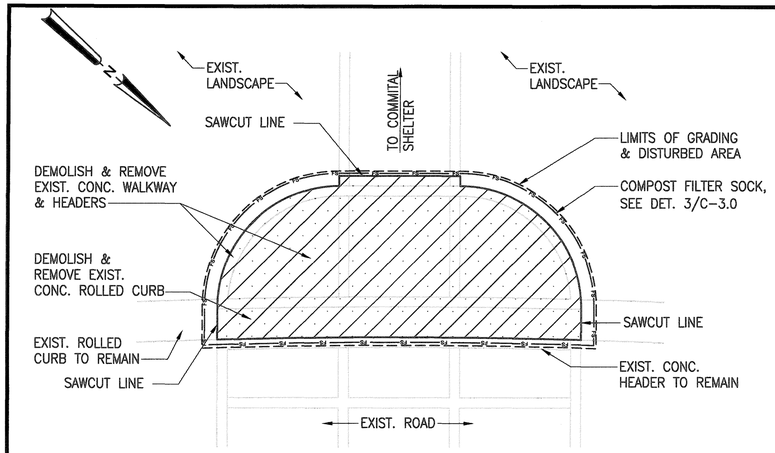

1 / C-2.0 **INSET 1**
SCALE: 1" = 5'-0"

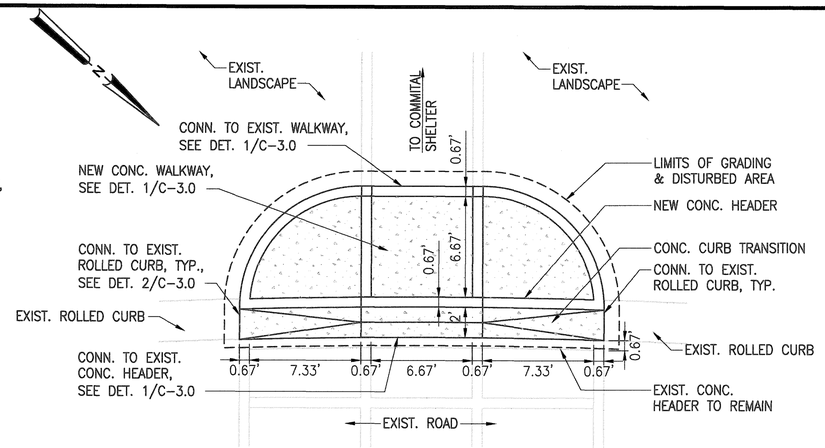

2 / C-2.0 **INSET 2**
SCALE: 1" = 5'-0"

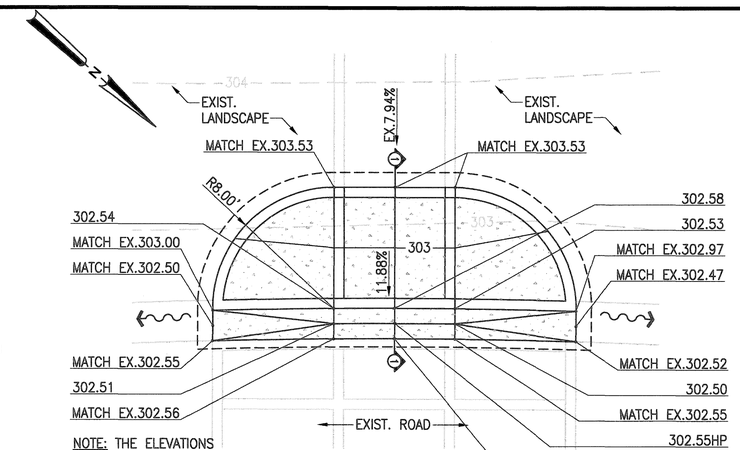

NOTE: THE ELEVATIONS SHOWN ON "INSET 3" ARE FROM AN EXIST. ASBUILT PLANS, & FOR REFERENCE ONLY

3 / C-2.0 **INSET 3**
SCALE: 1" = 5'-0"

LEGEND

- LIMITS OF GRADING & DISTURBED AREA
- DEMOLISH & REMOVE EXIST. CONC. PAVEMENT/WALKWAY
- CONC. WALKWAY SEE DET. 1/C-3.0
- FS — COMPOST FILTER SOCK, TYP., SEE DET. 3/C-3.0
- 302 — FINISHED GRADE CONTOUR
- 302 — EXISTING GRADE CONTOUR
- FLOW ARROW

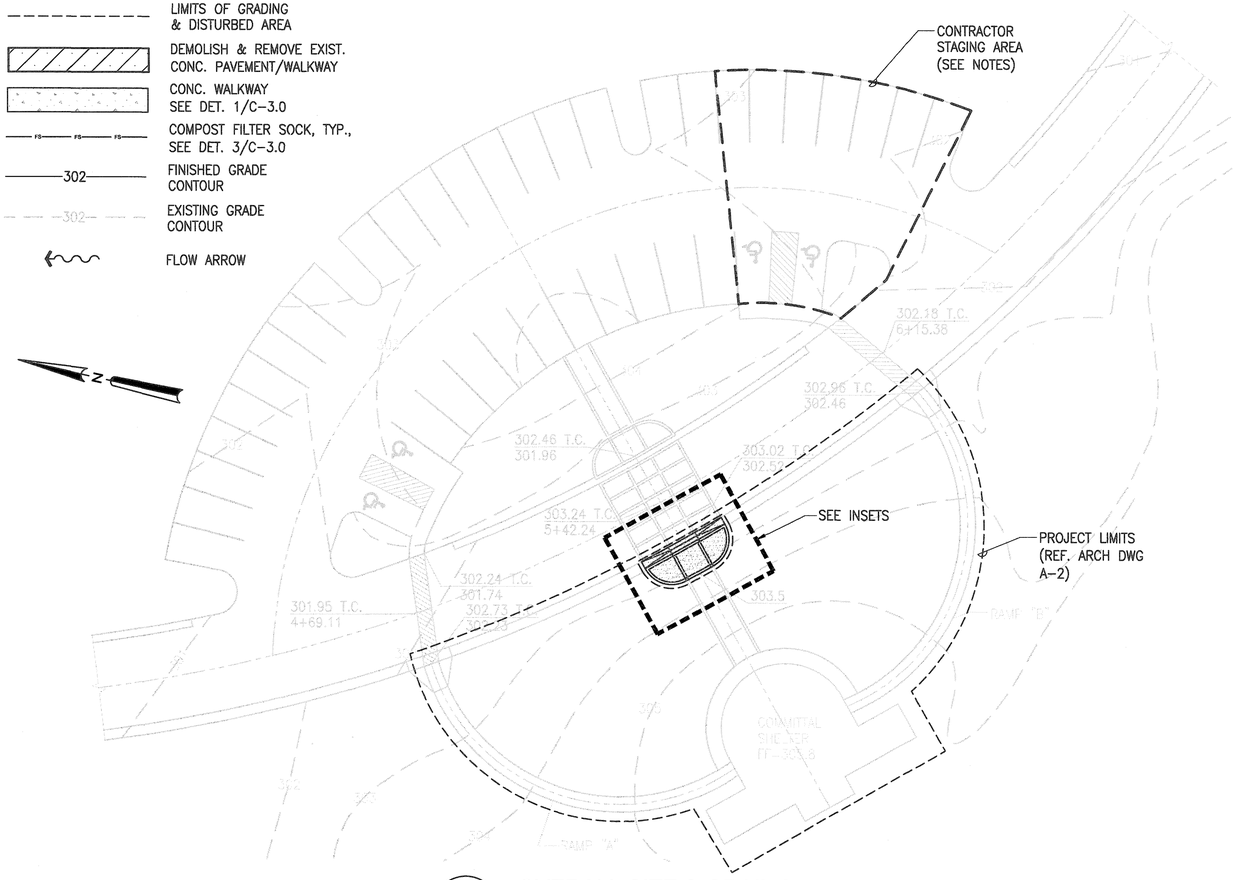

1 / C-2.0 **OVERALL SITE & GRAING PLAN**
SCALE: 1" = 20'-0"

NOTES:

1. THE CONTRACTOR SHALL DELINEATE THE AREA WITH BARRICADES/DELINEATORS/CONES/TAPE. STATE WILL NOT BE RESPONSIBLE FOR LOSS OR DAMAGE
2. THE STAGING AREA SHALL BE CLEANED/RESTORED BACK TO ITS EXISTING CONDITION.
3. THE CONTRACTOR SHALL BE AWARE THAT THERE ARE GRAVES ON THE HAWAII MEMORIAL PARK SIDE BEHIND THE COMMITTAL SHELTER THAT ARE IN CLOSE PROXIMITY TO THE CONSTRUCTION SITE. CARE NEEDS TO BE TAKEN DURING CLEANING/POWER WASHING OPERATION TO ENSURE THAT THERE ARE NO OR MINIMAL OVERSPRAY.
4. THE CONTRACTOR SHALL STOP NOSE-PRODUCING WORK TEMPORARILY IF THERE IS A MEMORIAL/BURIAL SERVICE IN PROGRESS ON THE HAWAII MEMORIAL PARK SIDE IN CLOSE PROXIMITY TO THE COMMITTAL SHELTER.
5. EQUIPMENT, FURNITURE AND TOOLS WILL BE REMOVED FROM THE STORAGE ROOMS PRIOR TO CONSTRUCTION SO NO TEMPORARY STORAGE LOCKER WILL BE REQUIRED.

GRAPHIC SCALE

1" = 20' — 20' 10' 0 20' 40'

1" = 5' — 5' 0 5' 10'

REVISION NO.	SYM.	DESCRIPTION	SHT. OF.	DATE	APPROVED

CHAD M. MCDONALD — LICENSED PROFESSIONAL ENGINEER No. 9793-C — HAWAII, U.S.A.

This work was prepared by me or under my supervision

4/30/2016
MITSUNAGA & ASSOCIATES, INC. EXP. DATE

NOTE: Contractor to check and verify dimensions at job before proceeding with work.

STATE OF HAWAII
DEPARTMENT OF DEFENSE
OFFICE OF VETERANS SERVICES

COMMITTAL SHELTER ROOF & CEILING REPAIRS AND MISCELLANEOUS IMPROVEMENTS
HAWAII STATE VETERANS CEMETERY
KANEOHE, OAHU, HAWAII

SITE PLANS

MITSUNAGA & ASSOCIATES, INC.	JOB NO. CA-1516-C	DRAWING NO. C-2.0
DRAWN BY: CB	DATE: MARCH 2016	SHEET 5 of 15
SCALE: AS INDICATED		

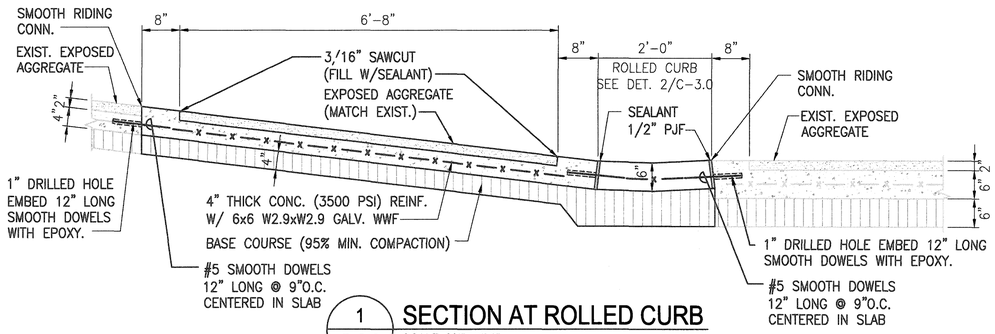

1 / C-3.0 **SECTION AT ROLLED CURB**

SCALE: 3/4" = 1'-0"

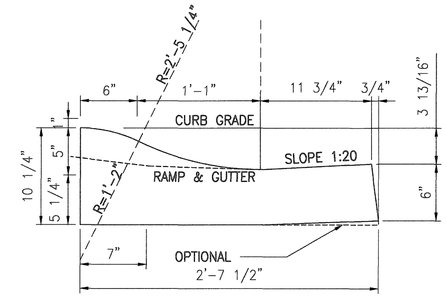

2 / C-3.0 **CAST IN PLACE ROLLED CURB SECTION**

SCALE: 3/4"=1'-0"

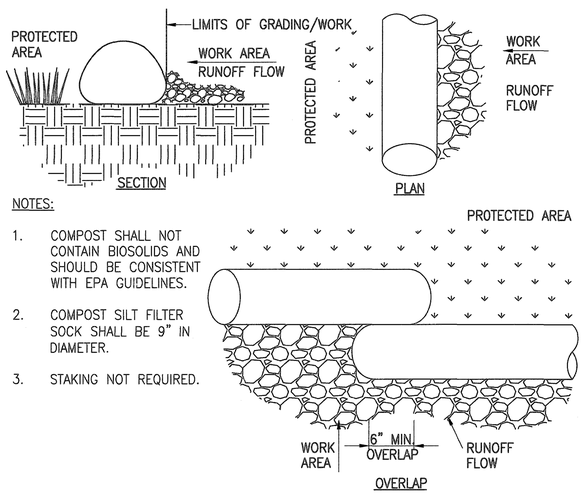

NOTES:

1. COMPOST SHALL NOT CONTAIN BIOSOLIDS AND SHOULD BE CONSISTENT WITH EPA GUIDELINES.
2. COMPOST SILT FILTER SOCK SHALL BE 9" IN DIAMETER.
3. STAKING NOT REQUIRED.

1 / C-3.0 **COMPOST FILTER SOCK DETAIL**

SCALE: 1"=1'-0"

SCALE: 3/4"=1'-0"

0 0.5 1 2 3

SCALE: 1"=1'-0"

0 0.5 1 2

SCALE: 1 1/2"=1'-0"

0 0.25 0.5 1

REVISION NO.	SYM.	DESCRIPTION	SHT. OF.	DATE	APPROVED

CHAD M. MCDONALD
LICENSED PROFESSIONAL ENGINEER
No. 9793-C
HAWAII, U.S.A.

This work was prepared by me or under my supervision

4/30/2016
MITSUNAGA & ASSOCIATES, INC. EXP. DATE

NOTE: Contractor to check and verify dimensions at job before proceeding with work.

STATE OF HAWAII
DEPARTMENT OF DEFENSE
OFFICE OF VETERANS SERVICES

COMMITTAL SHELTER ROOF & CEILING REPAIRS AND MISCELLANEOUS IMPROVEMENTS
HAWAII STATE VETERANS CEMETERY
KANEOHE, OAHU, HAWAII

DETAILS

MITSUNAGA & ASSOCIATES, INC.	JOB NO. CA-1516-C	DRAWING NO. C-3.0
DRAWN BY: CB	DATE: MARCH 2016	SHEET 6 of 15
SCALE: AS INDICATED		

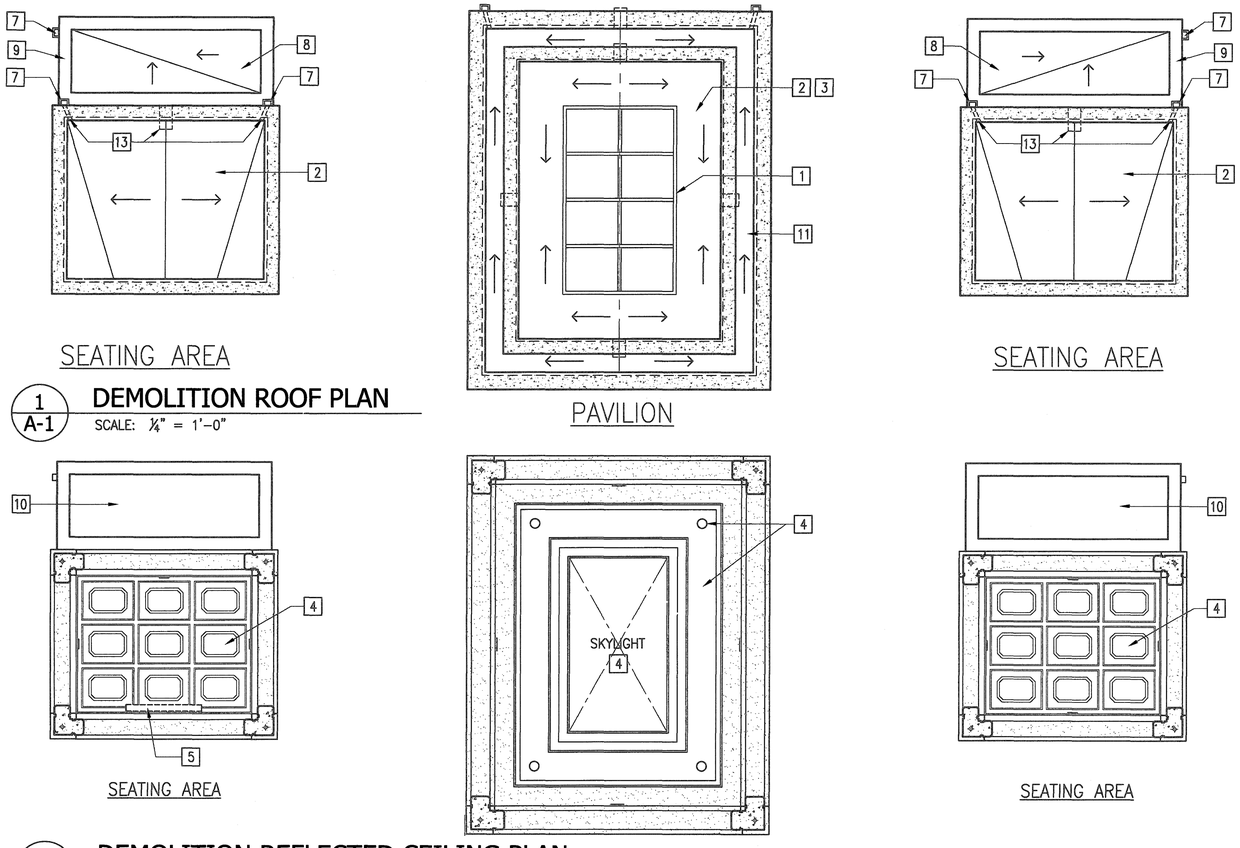

1 A-1 **DEMOLITION ROOF PLAN**
SCALE: ¼" = 1'-0"

2 A-1 **DEMOLITION REFLECTED CEILING PLAN** PAVILION
SCALE: ¼" = 1'-0"

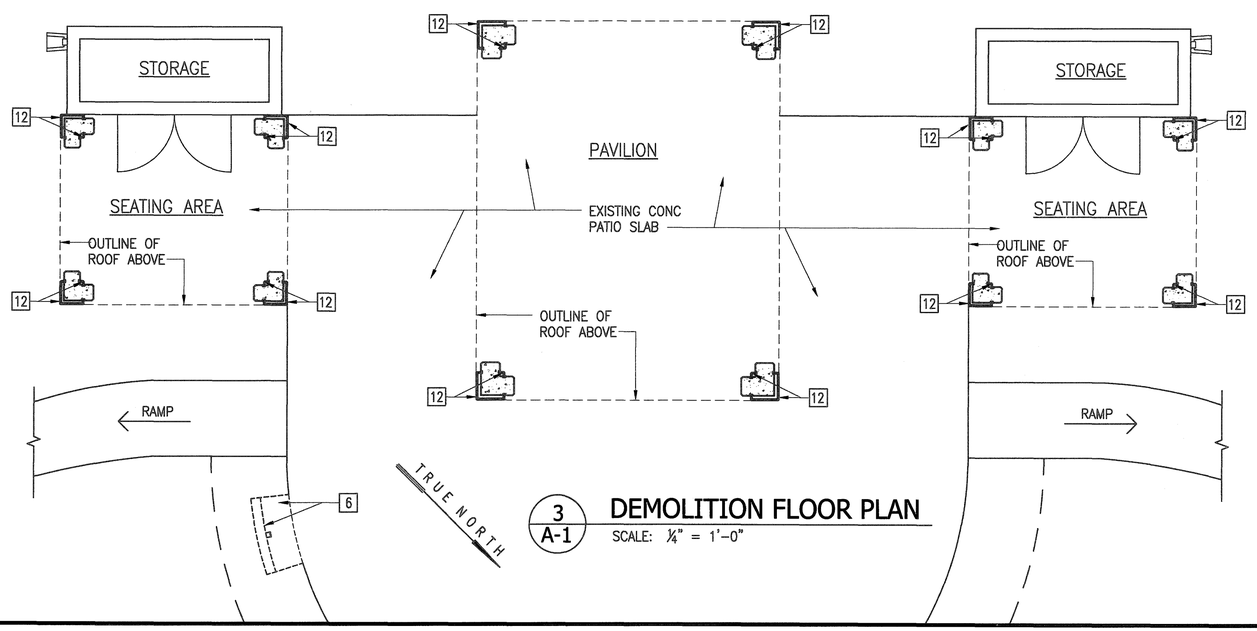

3 A-1 **DEMOLITION FLOOR PLAN**
SCALE: ¼" = 1'-0"

DEMOLITION KEY NOTES

1. REMOVE EXISTING ALUMINUM FRAMED SKYLIGHT. RESEAL THE EXISTING GLAZING AND REPLACE OR REPAIR THE INTEGRAL CAP FLASHING AS NECESSARY TO ENSURE A WATERTIGHT ASSEMBLY. THE SKYLIGHT SHALL BE STORED SAFELY UNTIL IT IS READY TO BE REINSTALLED.
2. COMPLETELY REMOVE EXISTING ROOF ASSEMBLY, INCLUDING BUT NOT LIMITED TO: ROOFING MEMBRANE, METAL FLASHING, RECOVER BOARDS, RIGID INSULATION, WOOD NAILERS, CANT STRIPS, GYP BOARD SHEATHING AND PLYWOOD DECKING.
3. COMPLETELY REMOVE EXISTING WOODEN ROOF FRAMING, INCLUDING BUT NOT LIMITED TO: STRUCTURAL FRAMING MEMBERS, ANCHOR BOLTS, CONNECTION PLATES AND JOIST HANGERS.
4. COMPLETELY REMOVE EXISTING CEILING ASSEMBLY, INCLUDING BUT NOT LIMITED TO: RECESSED LIGHT FIXTURES, HDWD PLYWOOD SHEATHING, FURRING STRIPS, WOOD TRIMS AND MOULDING.
5. REMOVE WALL MOUNTED LIGHT FIXTURE
6. REMOVE CONCRETE DRINKING FOUNTAIN SUPPORT WALL AND SLAB ON GRADE, INCLUDING WATER PIPING AND DRAIN LINE. CAP WATER AND DRAIN LINES 6" BELOW GRADE, MIN. AFTER REMOVAL, LANDSCAPE VOID TO MATCH EXISTING SHRUBBERY.
7. EXISTING COPPER LEADER BOX AND DOWNSPOUT TO REMAIN, TYP.
8. ROOFING SYSTEM ABOVE EXISTING STORAGE ROOM TO REMAIN.
9. EXISTING COPPER FLASHING TO REMAIN.
10. STORAGE ROOM CEILING TO REMAIN.
11. REMOVE EXISTING METAL PAN
12. REMOVE EXISTING TRAVERTINE PANELS AT BOTTOM COURSE
13. REMOVE EXISTING METAL SCUPPERS.

REVISION NO.	SYM.	DESCRIPTION	SHT. OF.	DATE	APPROVED

STEVEN D. WONG
LICENSED PROFESSIONAL ARCHITECT
No. 4646
HAWAII U.S.A.

THIS WORK WAS PREPARED BY ME OR UNDER MY SUPERVISION AND CONSTRUCTION OF THIS PROJECT WILL BE UNDER MY OBSERVATION. (OBSERVATION OF CONSTRUCTION AS DEFINED IN CHAPTER 16-115, SUBCHAPTER 1 DEFINITIONS, OF THE HAWAII ADMINISTRATIVE RULES, "PROFESSIONAL ENGINEERS, ARCHITECTS, SURVEYORS, AND LANDSCAPE ARCHITECTS")

EXPIRATION DATE: 4-30-18

MITSUNAGA & ASSOCIATES, INC.

STATE OF HAWAII
DEPARTMENT OF DEFENSE
OFFICE OF VETERANS SERVICES

COMMITTAL SHELTER ROOF & CEILING REPAIRS
AND
MISCELLANEOUS IMPROVEMENTS
HAWAII STATE VETERANS CEMETERY
KANEOHE, OAHU, HAWAII

COMMITTAL SHELTER
DEMOLITION PLANS, DEMOLITION NOTES

MITSUNAGA & ASSOCIATES, INC.	JOB NO. CA-1516-C	DRAWING NO. A-1
DRAWN BY: A.C.	DATE: FEB. 2016	SHEET 7 of 15
SCALE: AS INDICATED		

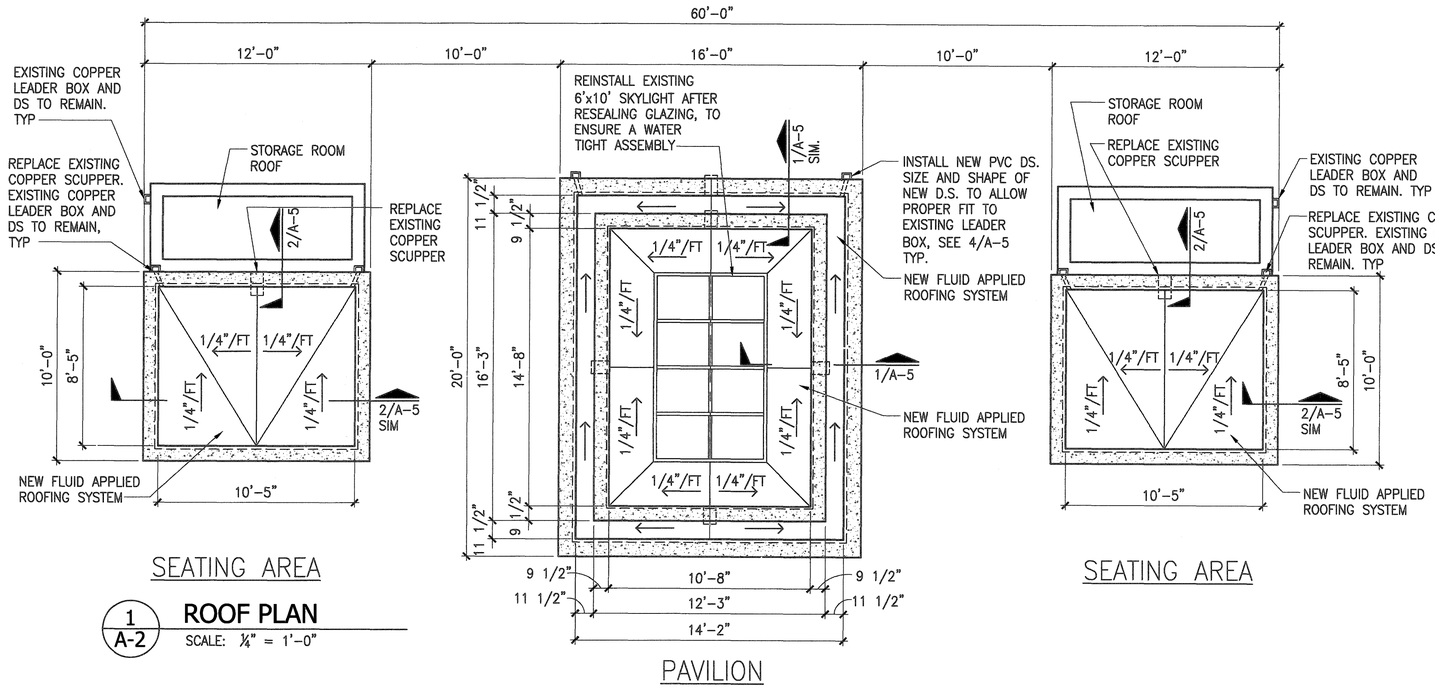

1 A-2 **ROOF PLAN**
SCALE: ¼" = 1'-0"

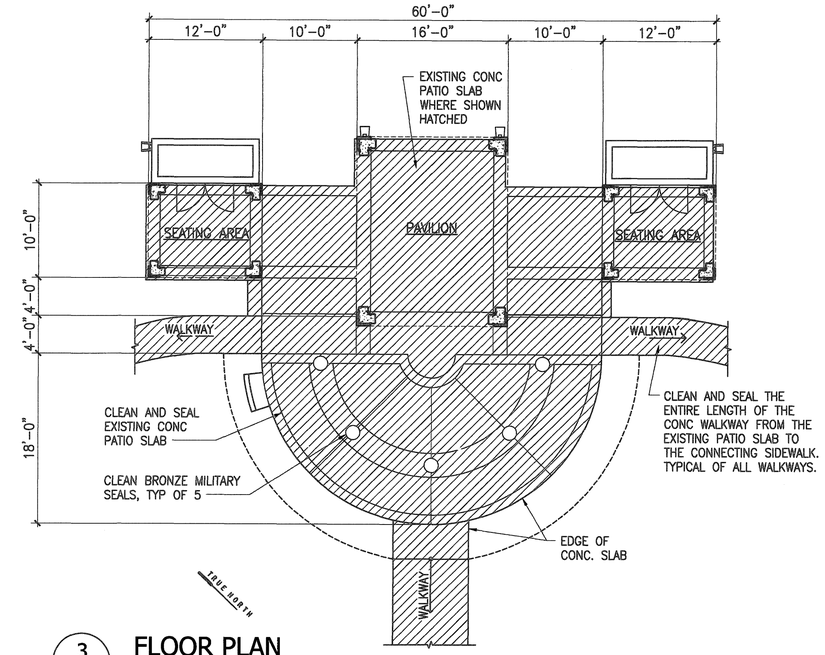

3 A-2 **FLOOR PLAN**
SCALE: 1/8" = 1'-0"

NOTE:
WHERE SHOWN HATCHED, CLEAN AND SEAL EXISTING CONCRETE PATIO SLAB AND ADJOINING WALKWAYS.

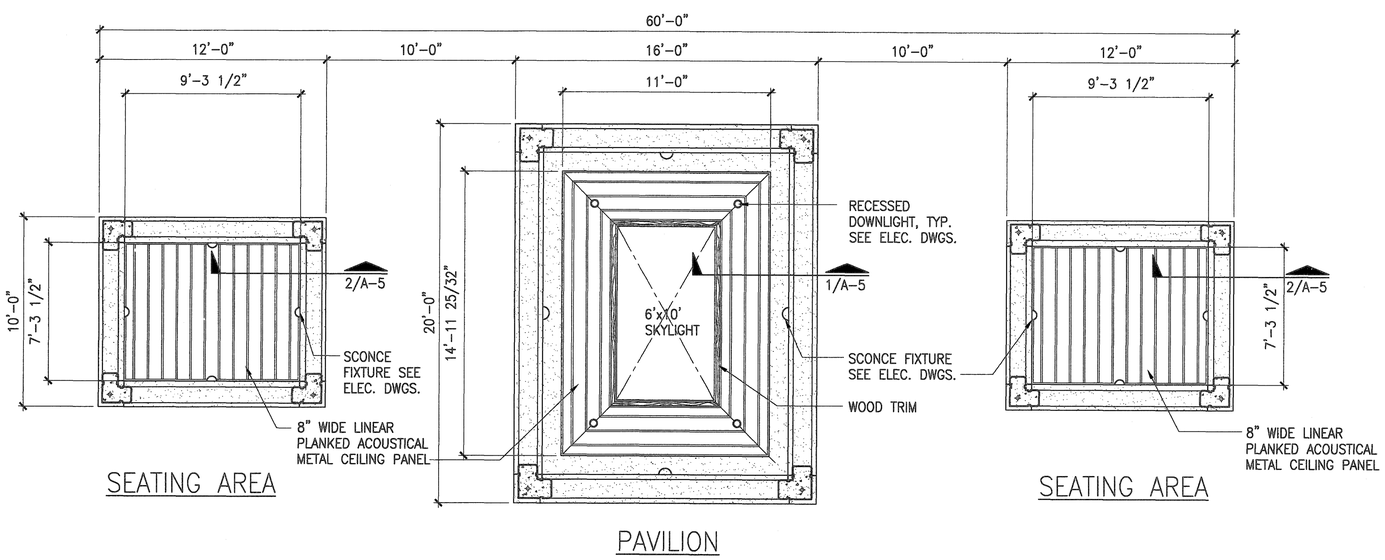

2 A-2 **REFLECTED CEILING PLAN**
SCALE: ¼" = 1'-0"

REVISION NO.	SYM.	DESCRIPTION	SHT. OF.	DATE	APPROVED

STEVEN D. WONG
LICENSED PROFESSIONAL ARCHITECT
No. 4646
HAWAII U.S.A.

THIS WORK WAS PREPARED BY ME OR UNDER MY SUPERVISION AND CONSTRUCTION OF THIS PROJECT WILL BE UNDER MY OBSERVATION. (OBSERVATION OF CONSTRUCTION AS DEFINED IN CHAPTER 16-115, SUBCHAPTER 1 DEFINITIONS, OF THE HAWAII ADMINISTRATIVE RULES, "PROFESSIONAL ENGINEERS, ARCHITECTS, SURVEYORS, AND LANDSCAPE ARCHITECTS")

EXPIRATION DATE: 4-30-16

MITSUNAGA & ASSOCIATES, INC.

STATE OF HAWAII
DEPARTMENT OF DEFENSE
OFFICE OF VETERANS SERVICES

COMMITTAL SHELTER ROOF & CEILING REPAIRS AND MISCELLANEOUS IMPROVEMENTS
HAWAII STATE VETERANS CEMETERY
KANEOHE, OAHU, HAWAII

COMMITTAL SHELTER
ROOF PLAN, REFLECTED CEILING PLAN, FLOOR PLAN

MITSUNAGA & ASSOCIATES, INC.

JOB NO. CA-1516-C

DRAWING NO. A-2

DRAWN BY: A.C.

DATE: FEB. 2016

SCALE: AS INDICATED

SHEET 8 of 15

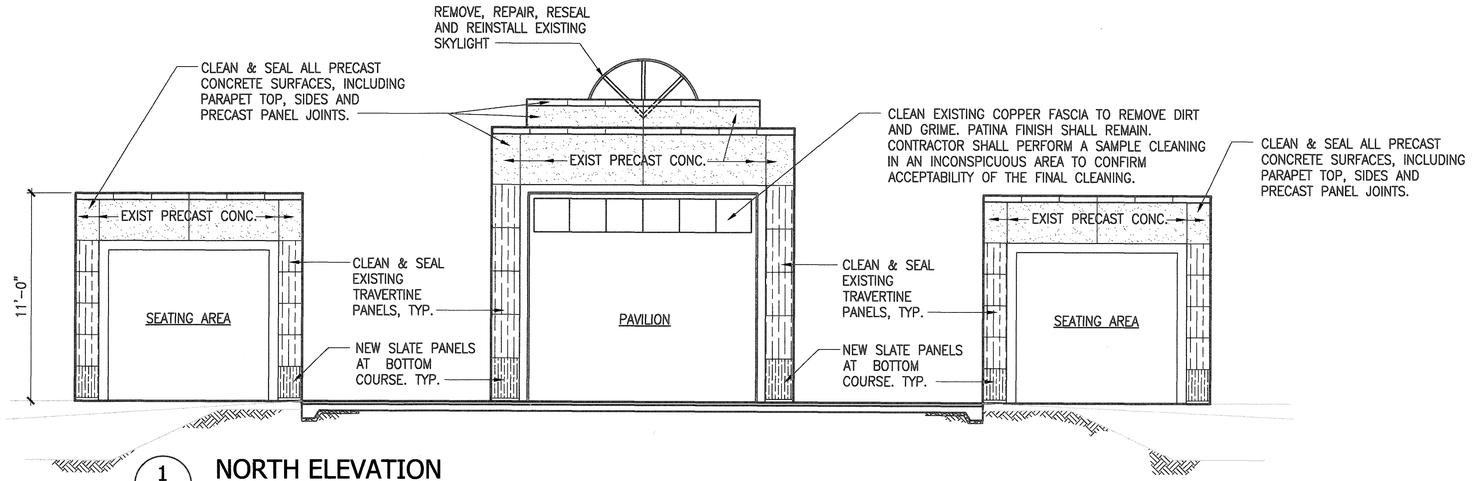

1 / A-3 **NORTH ELEVATION**
SCALE: ¼" = 1'-0"

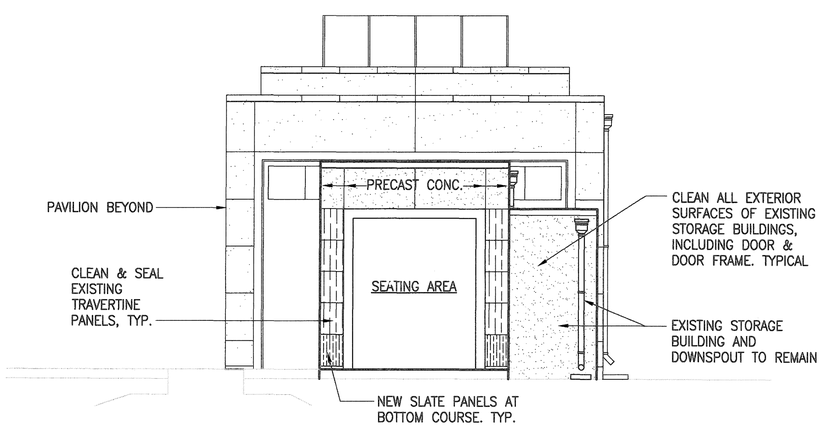

2 / A-3 **EAST ELEVATION (WEST SAME, REVERESED)**
SCALE: ¼" = 1'-0"

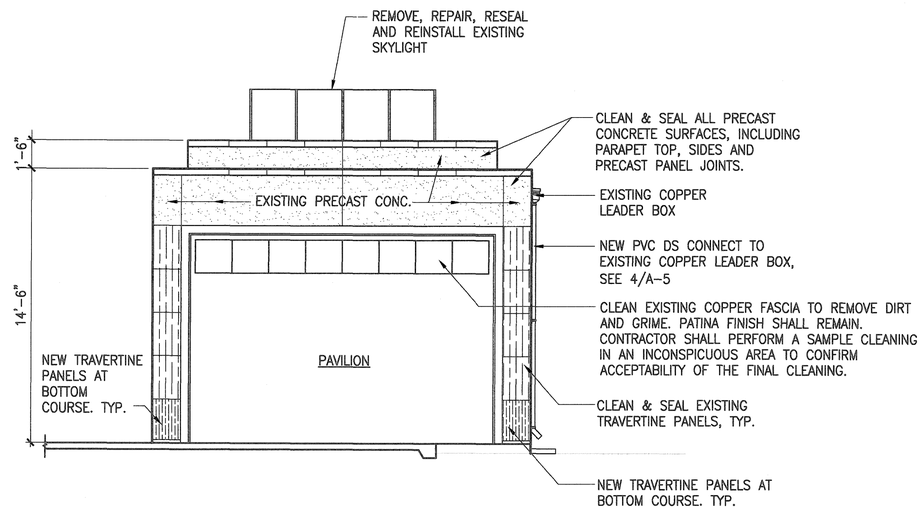

3 / A-3 **EAST ELEVATION OF PAVILION (WEST SAME, REVERESED)**
SCALE: ¼" = 1'-0"

REVISION NO.	SYM.	DESCRIPTION	SHT. OF.	DATE	APPROVED

STEVEN D. WONG
LICENSED PROFESSIONAL ARCHITECT
No. 4646
HAWAII U.S.A.

THIS WORK WAS PREPARED BY ME OR UNDER MY SUPERVISION AND CONSTRUCTION OF THIS PROJECT WILL BE UNDER MY OBSERVATION. (OBSERVATION OF CONSTRUCTION AS DEFINED IN CHAPTER 16-115, SUBCHAPTER 1 DEFINITIONS, OF THE HAWAII ADMINISTRATIVE RULES, "PROFESSIONAL ENGINEERS, ARCHITECTS, SURVEYORS, AND LANDSCAPE ARCHITECTS")

EXPIRATION DATE: 4-30-16

MITSUNAGA & ASSOCIATES, INC.

STATE OF HAWAII
DEPARTMENT OF DEFENSE
OFFICE OF VETERANS SERVICES

COMMITTAL SHELTER ROOF & CEILING REPAIRS AND MISCELLANEOUS IMPROVEMENTS
HAWAII STATE VETERANS CEMETERY
KANEOHE, OAHU, HAWAII

COMMITTAL SHELTER
EXTERIOR ELEVATIONS

MITSUNAGA & ASSOCIATES, INC.	JOB NO. CA-1516-C	DRAWING NO. A-3
DRAWN BY: A.C.	DATE: FEB. 2016	SHEET 9 of 15
SCALE: AS INDICATED		

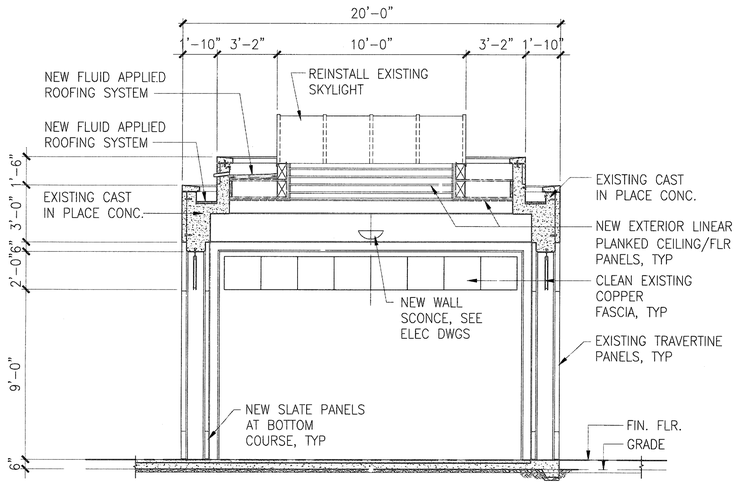

PAVILION LONGITUDINAL SECTION

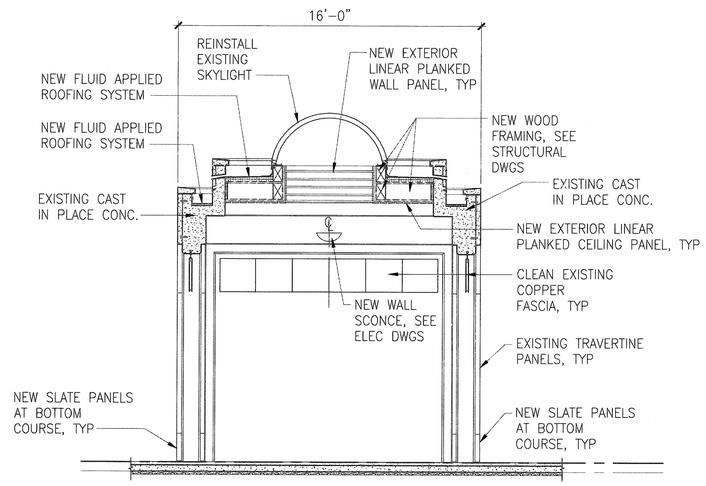

PAVILION CROSS SECTION

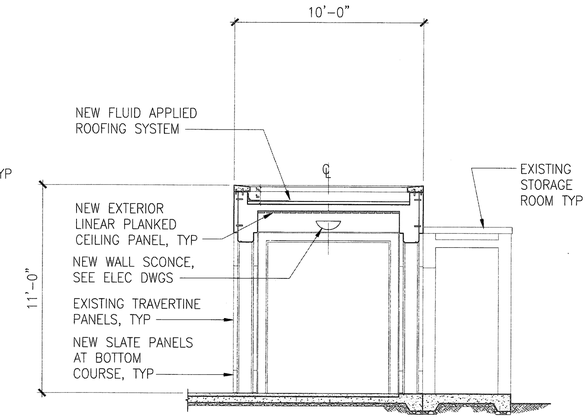

SEATING AREA CROSS SECTION

1 / A-4 **BUILDING SECTIONS**

SCALE: ¼" = 1'-0"

REVISION NO.	SYM.	DESCRIPTION	SHT. OF.	DATE	APPROVED

STEVEN D. WONG
LICENSED PROFESSIONAL ARCHITECT
No. 4646
HAWAII U.S.A.

THIS WORK WAS PREPARED BY ME OR UNDER MY SUPERVISION AND CONSTRUCTION OF THIS PROJECT WILL BE UNDER MY OBSERVATION. (OBSERVATION OF CONSTRUCTION AS DEFINED IN CHAPTER 16-115, SUBCHAPTER 1 DEFINITIONS, OF THE HAWAII ADMINISTRATIVE RULES, "PROFESSIONAL ENGINEERS, ARCHITECTS, SURVEYORS, AND LANDSCAPE ARCHITECTS")

EXPIRATION DATE: 4-30-16

MITSUNAGA & ASSOCIATES, INC.

STATE OF HAWAII
DEPARTMENT OF DEFENSE
OFFICE OF VETERANS SERVICES

COMMITTAL SHELTER ROOF & CEILING REPAIRS AND MISCELLANEOUS IMPROVEMENTS
HAWAII STATE VETERANS CEMETERY
KANEOHE, OAHU, HAWAII

COMMITTAL SHELTER
BUILDING SECTIONS

MITSUNAGA & ASSOCIATES, INC.	JOB NO. CA-1516-C	DRAWING NO. A-4
DRAWN BY: A.C.	DATE: FEB. 2016	SHEET 10 of 15
SCALE: AS INDICATED		

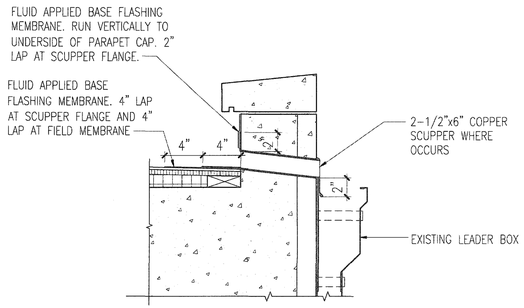

3 / A-5 **DETAIL @ SEATING AREA ROOF**

SCALE: 1-1/2" = 1'-0"

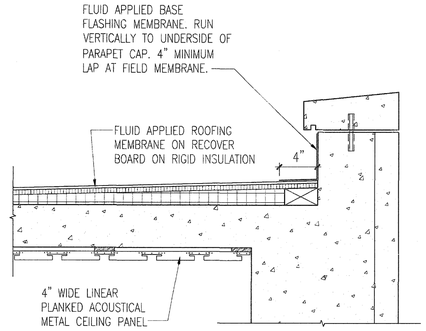

2 / A-5 **DETAIL @ SEATING AREA ROOF**

SCALE: 1-1/2" = 1'-0"

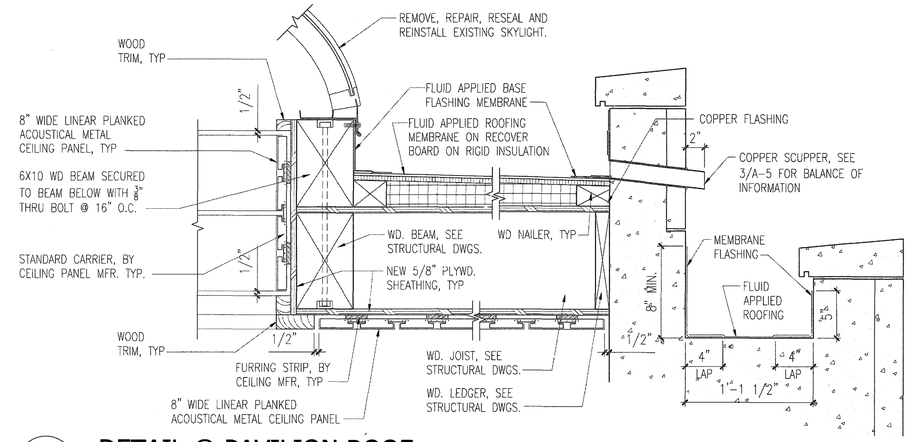

1 / A-5 **DETAIL @ PAVILION ROOF**

SCALE: 1-1/2" = 1'-0"

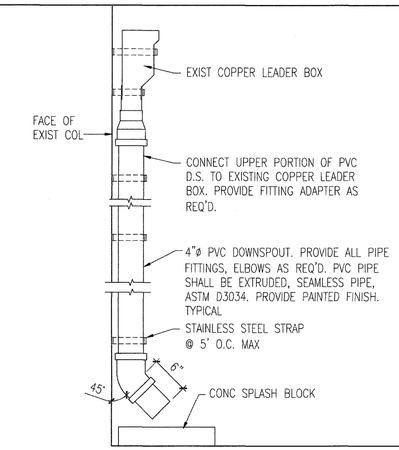

4 / A-5 **DOWNSPOUT @ PAVILION DETAIL**

SCALE: 1-1/2" = 1'-0"

REVISION NO.	SYM.	DESCRIPTION	SHT. OF.	DATE	APPROVED

STEVEN D. WONG
LICENSED PROFESSIONAL ARCHITECT
No. 4646
HAWAII U.S.A.

THIS WORK WAS PREPARED BY ME OR UNDER MY SUPERVISION AND CONSTRUCTION OF THIS PROJECT WILL BE UNDER MY OBSERVATION. (OBSERVATION OF CONSTRUCTION AS DEFINED IN CHAPTER 16-115, SUBCHAPTER I DEFINITIONS, OF THE HAWAII ADMINISTRATIVE RULES, "PROFESSIONAL ENGINEERS, ARCHITECTS, SURVEYORS, AND LANDSCAPE ARCHITECTS")

EXPIRATION DATE: 4-30-16

MITSUNAGA & ASSOCIATES, INC.

STATE OF HAWAII
DEPARTMENT OF DEFENSE
OFFICE OF VETERANS SERVICES

COMMITTAL SHELTER ROOF & CEILING REPAIRS
AND
MISCELLANEOUS IMPROVEMENTS
HAWAII STATE VETERANS CEMETERY
KANEOHE, OAHU, HAWAII

COMMITTAL SHELTER
DETAILS

MITSUNAGA & ASSOCIATES, INC.	JOB NO. CA-1516-C	DRAWING NO. A-5
DRAWN BY: A.C.	DATE: FEB. 2016	SHEET 11 of 15
SCALE: AS INDICATED		

GENERAL NOTES

GENERAL

1. ALL MATERIALS AND WORKMANSHIP SHALL CONFORM TO THE DRAWINGS AND THE SPECIFICATIONS, AND SHALL CONFORM TO THE INTERNATIONAL BUILDING CODE 2006 EDITION, AS ADOPTED BY THE CITY AND COUNTY OF HONOLULU.
2. THE CONTRACTOR SHALL BE RESPONSIBLE FOR COORDINATING THE WORK OF ALL TRADES AND SHALL VERIFY ALL DIMENSIONS AND CONDITIONS PRIOR TO STARTING WORK. ALL DISCREPANCIES, OMISSIONS OR CONFLICTS SHALL BE REPORTED TO THE CONTRACTING OFFICER AND BE RESOLVED BEFORE BIDDING.
3. ALL INFORMATION SHOWN ON THE DRAWINGS RELATIVE TO EXISTING CONDITIONS IS GIVEN AS THE BEST PRESENT KNOWLEDGE, BUT WITHOUT GUARANTEE OF ACCURACY. WHERE ACTUAL CONDITIONS CONFLICT WITH THE DRAWINGS, THEY SHALL BE REPORTED TO THE CONTRACTING OFFICER SO THAT THE PROPER REVISIONS MAY BE MADE.
4. SHOP DRAWINGS REQUIRED BY THE SPECIFICATIONS SHALL BE SUBMITTED TO THE CONTRACTING OFFICER FOR REVIEW PRIOR TO FABRICATION.
5. DURING CONSTRUCTION, THE CONTRACTOR SHALL BE RESPONSIBLE FOR THE SAFETY OF THE JOBSITE. THE CONTRACTOR SHALL PROVIDE ADEQUATE SHORING, BRACING, GUYS, ETC., IN ACCORDANCE WITH ALL SAFETY ORDINANCES.

DESIGN LOADS

1. LIVE LOAD
   - a. ROOF: 20 PSF
   - b. FLOOR SLAB ON GRADE: 150 PSF
2. LATERAL LOAD
   - a. SEISMIC IMPORTANT FACTOR: 1.0
     - Ss: 0.613
     - S1: 0.177
     - SITE CLASS: D
     - SDS: 0.535
     - SD1: 0.247
     - SEISMIC DESIGN CATEGORY: D
     - SEISMIC FORCE RESISTING SYSTEM: MOMENT RESISTING SYSTEMS
     - RESPONSE MODIFICATION COEF.: 3.0
   - b. WIND
     - BACIS WIND SPEED: 130 MPH
     - IMPORTANT FACTOR: 1.0
     - EXPOSURE: B
     - BUILDING ENCLOSURE CLASS: OPEN
     - TOPOGRAPHIC FACTOR: 1.6

STRUCTURAL TIMBER

1. ALL LUMBER SHALL BE DOUGLAS FIR-LARCH, NO. 2 GRADE OR GREATER FOR BEAMS, AND NO. 2 GRADE OR GREATER FOR 2" TO 4" THICK AND WIDER SIZES.
2. ALL LUMBER SHALL BE TREATED IN ACCORDANCE WITH THE SPECIFICATIONS FOR TERMITE AND FIRE RESISTANCE.
3. ALL TIMBER CONNECTIONS SHALL BE GALVANIZED AND IN ACCORDANCE WITH THE SIZES AND SHAPES SHOWN OR AS APPROVED EQUAL BY THE ENGINEER.
4. EXPANSION ANCHOR BOLTS SHALL BE HILTI KWIK BOLTS OR APPROVED EQUAL.

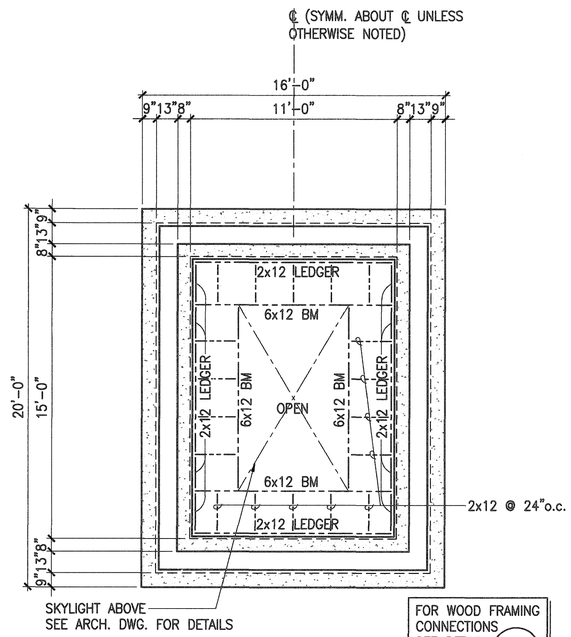

PAVILION

FOR WOOD FRAMING CONNECTIONS SEE DETAIL 2/S-1

1/S-1 ROOF FRAMING PLAN

SCALE: 1/4" = 1'-0"

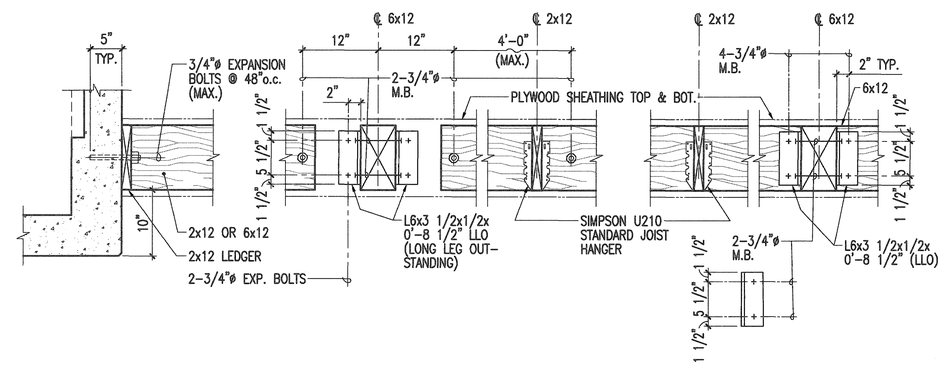

2x12 LEDGER ANCHORAGE DET.

6x12 & 2x12 LEDGER

6x12 & 2x12 BEAM

2/S-1 ROOF WOOD FRAMING CONNECTION DETAILS

NOT TO SCALE

REVISION NO.	SYM.	DESCRIPTION	SHT. OF.	DATE	APPROVED

DENNIS K. MITSUNAGA LICENSED PROFESSIONAL ENGINEER No. 2422-S HAWAII, U.S.A.

THIS WORK WAS PREPARED BY ME OR UNDER MY SUPERVISION AND CONSTRUCTION OF THIS PROJECT WILL BE UNDER MY OBSERVATION. (OBSERVATION OF CONSTRUCTION AS DEFINED IN CHAPTER 16-115, SUBCHAPTER 1 DEFINITIONS, OF THE HAWAII ADMINISTRATIVE RULES, "PROFESSIONAL ENGINEERS, ARCHITECTS, SURVEYORS, AND LANDSCAPE ARCHITECTS")

EXPIRATION DATE: 4-30-16

MITSUNAGA & ASSOCIATES, INC.

STATE OF HAWAII
DEPARTMENT OF DEFENSE
OFFICE OF VETERANS SERVICES

COMMITTAL SHELTER ROOF & CEILING REPAIRS AND MISCELLANEOUS IMPROVEMENTS
HAWAII STATE VETERANS CEMETERY
KANEOHE, OAHU, HAWAII

GENERAL NOTES, ROOF FRAMING PLAN, ROOF WOOD FRAMING CONNECTION DETAILS

MITSUNAGA & ASSOCIATES, INC.		JOB NO. CA-1516-C	DRAWING NO. S-1
DRAWN BY: A.U.		DATE: FEB. 2016	SHEET 12 of 15
SCALE: AS INDICATED			

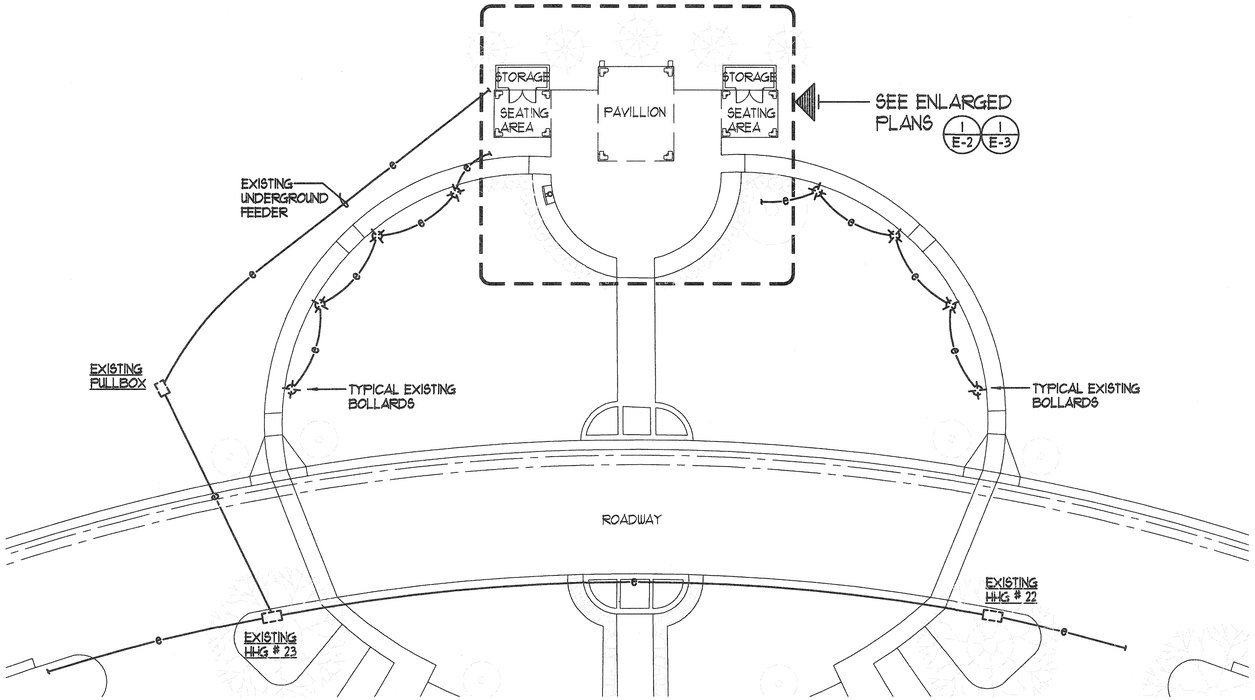

NORTH

1 / E-1 PARTIAL ELECTRICAL SITE PLAN

SCALE: 1/16" = 1' - 0"

GRAPHIC SCALE

0 4' 8' 16' 24' 48'

SCALE: 1/16"=1'-0"

ELECTRICAL SYMBOL LIST

EXISTING	NEW	DESCRIPTION
		LIGHT, FLUORESCENT, CEILING SURFACE MOUNTED.
		LIGHT, CEILING RECESSED MOUNTED.
		FLOODLIGHT, FLUSH MOUNTED IN GRADE.
		NIGHT LIGHT, WALL MOUNTED.
		BOLLARD LIGHT.
		OCCUPANCY SENSOR SWITCH, WALL MOUNTED.
"a"	"a"	INDICATES FIXTURE OR DEVICE CONTROLLED BY SW. "a", OTHER LETTERS SIMILAR.
		JUNCTION BOX, WALL MOUNTED.
		RECEPTACLE, DUPLEX, WALL MOUNTED, 20A, 125V, NEMA 5-20.
		RECEPTACLE, DUPLEX, G.F.I. TYPE, WALL MTD., 20A, 125V, NEMA 5-20.
		TRANSFORMER, WALL MOUNTED.
		ELECTRIC PANEL.
—e—		RACEWAY, CONCEALED ABOVE FINISH FLOOR.
2	2	ELECTRICAL NOTE INDICATOR.
	A / 1/E6	FIXTURE INDICATOR — UPPER HALF: FIXTURE TYPE. LOWER HALF: NO. OF LAMPS & WATTS OR LENGTH.
	2 / E-3	DETAIL INDICATOR — UPPER HALF: DETAIL NUMBER. LOWER HALF: SHEET NUMBER, DETAIL LOCATION.
	WP	INDICATES WEATHERPROOF.
	HHG	INDICATES HANDHOLE GROUP.

BUILDING ENERGY EFFICIENCY STANDARDS
EXTERIOR LIGHTING POWER ALLOWANCE 491 W
INSTALLED 246 W

CITY AND COUNTY OF HONOLULU
REVISED ORDINANCE CHAPTER 32,
HONOLULU COUNTY CODE 1990, AS AMENDED

To the best of my knowledge, this project's design substantially conforms to the Building Energy Conservation Code for:

___ Building Component Systems
_X_ Electrical Component Systems
___ Mechanical Component Systems

Signature: _____ Date: 2/24/16
Name: BRIAN ITOZAKI
Title: ELECTRICAL ENGINEER
License No.: 9058-E

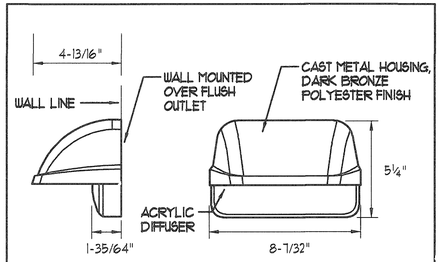

LIGHT SOURCE:
5 LEDS, 120/277V,
967 LUMENS, 12.8W
3000°K, 80 CRI

MANUFACTURER:
HUBBELL
LNC-5LU-3K-3-1
OR APPROVED EQUAL

FIXTURE TYPE "A"

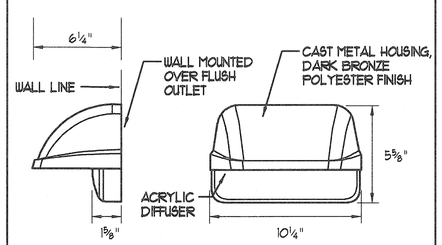

LIGHT SOURCE:
12 LEDS, 120/277V,
2,420 LUMENS, 28.6W
3000°K, 80 CRI

MANUFACTURER:
HUBBELL
LNC2-12LU-3K-3-1
OR APPROVED EQUAL

FIXTURE TYPE "B"

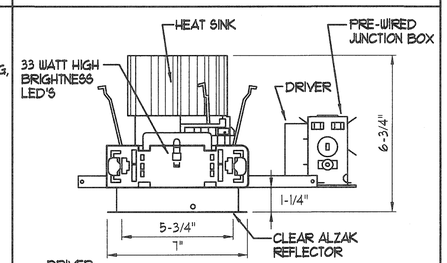

DRIVER:
120V, ELECTRONIC
LED DRIVER

LAMP:
33 WATT LED
4000°K COLOR TEMP.

MANUFACTURER:
PRESCOLITE
LF6LEDG4-6LFLED5G4-40K-WT
LITHONIA, KIRLIN OR
APPROVED EQUAL.

FIXTURE TYPE "C"

EXTERIOR LIGHTING POWER ALLOWANCE

ELPA = ELUPA X GLA

WHERE

ELPA = EXTERIOR LIGHTING POWER ALLOWANCE (W)
ELUPA = EXTERIOR UNIT LIGHTING POWER ALLOWANCE
GLA = GROSS LIGHTED AREA

	ELUPA	GLA	ELPA	INSTALLED
PAVILLION	1.25 W/ft.^{2}	236 ft.^{2}	295 W	246 W
SEATING AREAS	1.25 W/ft.^{2}	1.57 ft.^{2}	196 W	102 W
			491 W	246 W

GENERAL ELECTRICAL NOTES:

1. ELECTRICAL CONTRACTOR SHALL VISIT THE JOB SITE AND FAMILIARIZE HIMSELF WITH ALL EXISTING CONDITIONS PRIOR TO BIDDING. BID SUBMISSION SHALL BE CONSIDERED AS CONFIRMATION THAT THE CONTRACTOR HAS VISITED THE SITE AND HAS RESOLVED ALL DISCREPANCIES AND QUESTIONS REGARDING THE WORK. NO EXTRA PAYMENT WILL BE GIVEN FOR WORK MADE NECESSARY BY THE CONTRACTOR'S FAILURE TO VISIT THE SITE.
2. ALL RACEWAYS AND OUTLETS SHALL BE CONCEALED UNLESS OTHERWISE NOTED.
3. CONDUIT SIZES INDICATED ON THE DRAWINGS ARE NOT NECESSARILY BASED ON THE MINIMUM SIZE ALLOWED BY THE NATIONAL ELECTRICAL CODE AND MAY BE PURPOSELY OVERSIZED FOR FUTURE CONDUCTORS OR TO AVOID CONDUIT HEATING. CONDUIT SIZES NOT CALLED OUT ON THE DRAWINGS SHALL BE SIZED BY THE CONTRACTOR, BASED ON THE ACTUAL NUMBER OF CONDUCTORS TO BE INSTALLED, USING THE NATIONAL ELECTRICAL CODE AS A GUIDE. IN NO CASE SHALL CONDUIT SIZES BE SMALLER THAN ¾" DIAMETER.
4. ALL WIRING SHALL INCLUDE AN INSULATED GREEN GROUNDING CONDUCTOR SIZED PER TABLE 250-95 OF THE NATIONAL ELECTRICAL CODE. THIS CONDUCTOR SHALL BE CARRIED IN ALL RACEWAYS INCLUDING THOSE INSTALLED FOR SWITCH LEGS AND SHALL BE ATTACHED TO THE DEVICE, LIGHT FIXTURE, OR EQUIPMENT HOUSING USING A SUITABLE GROUNDING LUG.
5. THE CONTRACTOR SHALL PROVIDE AND INSTALL ALL JUNCTION AND PULL BOXES REQUIRED FOR THE INSTALLATION OF ELECTRICAL DEVICES AND EQUIPMENT, WHETHER OR NOT SPECIFICALLY INDICATED ON THE PLANS. SIZING OF THESE BOXES SHALL BE PER THE NATIONAL ELECTRICAL CODE.
6. THE CONTRACTOR SHALL CONFIRM THE TYPE OF CEILING BEING INSTALLED PRIOR TO ORDERING RECESSED LIGHTING FIXTURES. CATALOG NUMBERS MAY NOT INDICATE THE TYPE OF CEILING BEING PROVIDED BY OTHER TRADES. NON CONFIRMING OF CEILING AND IMPROPER ORDERING OF LIGHTING FIXTURES SHALL NOT BE CONSIDERED REASON FOR EXTRA COST.
7. PROJECT CONDITIONS MAY REQUIRE REARRANGEMENT OF ELECTRICAL WORK. THE CONTRACTOR SHALL INDICATE SUCH CHANGES ON THE AS-BUILT DRAWINGS. WHERE CHANGES REQUIRE ALTERNATE METHODS TO THOSE SPECIFIED IN THE CONTRACT DOCUMENTS, THE CONTRACTOR SHALL SUBMIT DRAWINGS SHOWING THE PROPOSED METHOD FOR APPROVAL. THE CONTRACTOR SHALL NOT PROCEED UNTIL APPROVAL IS OBTAINED. REARRANGEMENT OF WORK FOR THE PURPOSE OF COORDINATION BETWEEN TRADES SHALL NOT BE CONSIDERED A REASON FOR EXTRA COST.
8. EXISTING CONDITION SHOWN ON DRAWINGS ARE TAKEN FROM PAST DESIGN DRAWING AND MAY NOT REPRESENT ACTUAL FIELD CONDITIONS. PRIOR TO STARTING NEW WORK, CONTRACTOR SHALL VERIFY, TRACE, AND ALL EXISTING LIGHTING AND RECEPTACLES SHOWN. DEVIATIONS SHALL BE SHOWN ON AS-BUILT DRAWINGS.
9. THE CONTRACTOR SHALL COORDINATE HIS WORK WITH ALL OTHER TRADES.
10. THE CONTRACTOR SHALL LABEL EACH RECEPTACLE WITH PANEL NAME AND CIRCUIT NUMBER USE ADHESIVE LABELS - BLACK LETTERING ON CLEAR BACKGROUND.
11. THE CONTRACTOR SHALL RECONNECT ALL EXISTING AND CONNECT ALL NEW BRANCH CIRCUITS TO THE APPROPRIATE EXISTING ELECTRICAL PANEL.
12. THE CONTRACTOR SHALL FILL-IN THE PANEL SCHEDULES OF THE EXISTING ELECTRIC PANEL USING A TYPEWRITER. PROVIDE CIRCUIT DESCRIPTIONS BASED ON CIRCUIT TRACING OF EXISTING CIRCUITS AND PLAN DESCRIPTION FOR NEW CIRCUITS.
13. REFINISH AND PATCH TO MATCH ALL EXISTING WALL AND CEILING SURFACES DAMAGED OR SCRATCHED BY ELECTRICAL REMOVAL AND INSTALLATION WORK. NEW TOUCH-UP PAINT WORK SHALL BLEND INTO AND MATCH EXISTING FINISH.
14. ALL MULTIWIRE BRANCH CIRCUITS SHALL BE IN ACCORDANCE WITH NEC ARTICLE 210.4. ALL CIRCUITS SHALL HAVE INDIVIDUAL NEUTRALS.

REVISION NO.	SYM.	DESCRIPTION	SHT. OF.	DATE	APPROVED

BRIAN T. ITOZAKI
LICENSED PROFESSIONAL ENGINEER
No. 9058-E
HAWAII, U.S.A.

THIS WORK WAS PREPARED BY ME OR UNDER MY SUPERVISION AND CONSTRUCTION OF THIS PROJECT WILL BE UNDER MY OBSERVATION.

SIGNATURE

EXPIRATION DATE OF THE LICENSE: 04/30/16

STATE OF HAWAII
DEPARTMENT OF DEFENSE
OFFICE OF VETERANS SERVICES

COMMITTAL SHELTER ROOF & CEILING REPAIRS AND MISCELLANEOUS IMPROVEMENTS
HAWAII STATE VETERANS CEMETERY
KANEOHE, OAHU, HAWAII

PARTIAL ELECTRICAL SITE, ELECTRICAL SYMBOL LIST
GENERAL NOTES, LIGHTING CALCULATIONS

H & O - III, INC.

JOB NO. CA-1516-C

DRAWING NO. E-1

DRAWN BY: K.N.

DATE: FEB. 2016

SHEET 13 of 15

SCALE: AS INDICATED

388.237

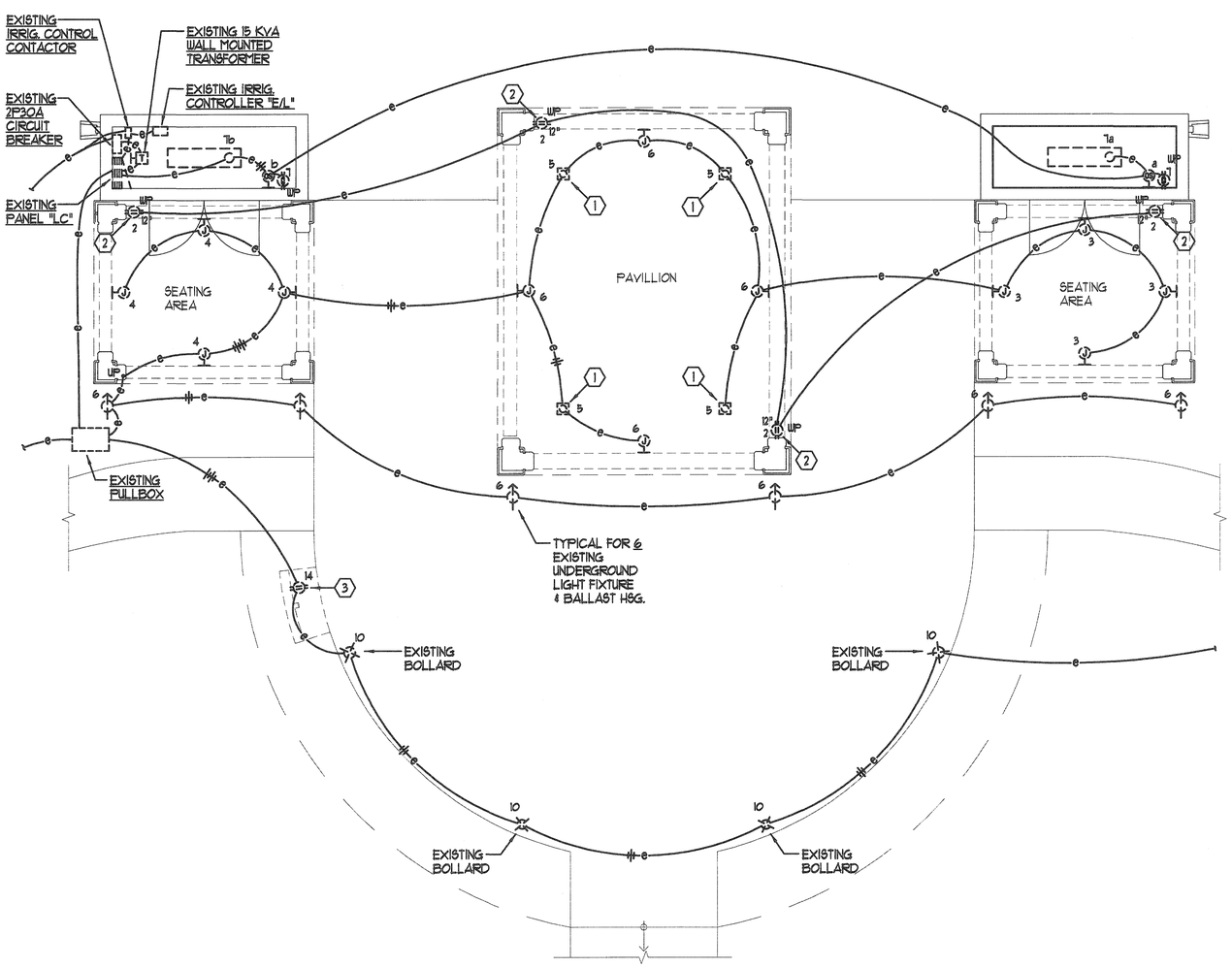

1 / E-2 EXISTING ELECTRICAL PLAN (REMOVAL WORK)
SCALE: ¼" = 1' - 0"

ELECTRICAL NOTES: EXISTING/REMOVAL WORK

1. DISCONNECT AND REMOVE CEILING RECESSED LIGHT FIXTURE.
2. DISCONNECT AND REMOVE FLUSH MOUNTED RECEPTACLE/PLATE.
3. DISCONNECT AND REMOVE OUTLET WITH RECEPTACLE/PLATE. INTERCEPT AND CONNECT RACEWAYS. PULL-IN NEW WIRES BETWEEN BOLLARD AND PULL BOX.

GRAPHIC SCALE
0 1' 2' 4' 6' 8' 12'
SCALE: 1/4"=1'-0"

REVISION NO.	SYM.	DESCRIPTION	SHT. OF.	DATE	APPROVED

BRIAN T. ITOZAKI
LICENSED PROFESSIONAL ENGINEER
No. 9058-E
HAWAII, U.S.A.

THIS WORK WAS PREPARED BY ME OR UNDER MY SUPERVISION AND CONSTRUCTION OF THIS PROJECT WILL BE UNDER MY OBSERVATION.

SIGNATURE

EXPIRATION DATE OF THE LICENSE: 04/30/16

STATE OF HAWAII
DEPARTMENT OF DEFENSE
OFFICE OF VETERANS SERVICES

COMMITTAL SHELTER ROOF & CEILING REPAIRS AND MISCELLANEOUS IMPROVEMENTS
HAWAII STATE VETERANS CEMETERY
KANEOHE, OAHU, HAWAII

EXISTING ELECTRICAL PLAN (REMOVAL WORK)

H & O - III, INC.	JOB NO. CA-1516-C	DRAWING NO. E-2
DRAWN BY: K.N.	DATE: FEB. 2016	SHEET 14 of 15
SCALE: AS INDICATED		

368.237

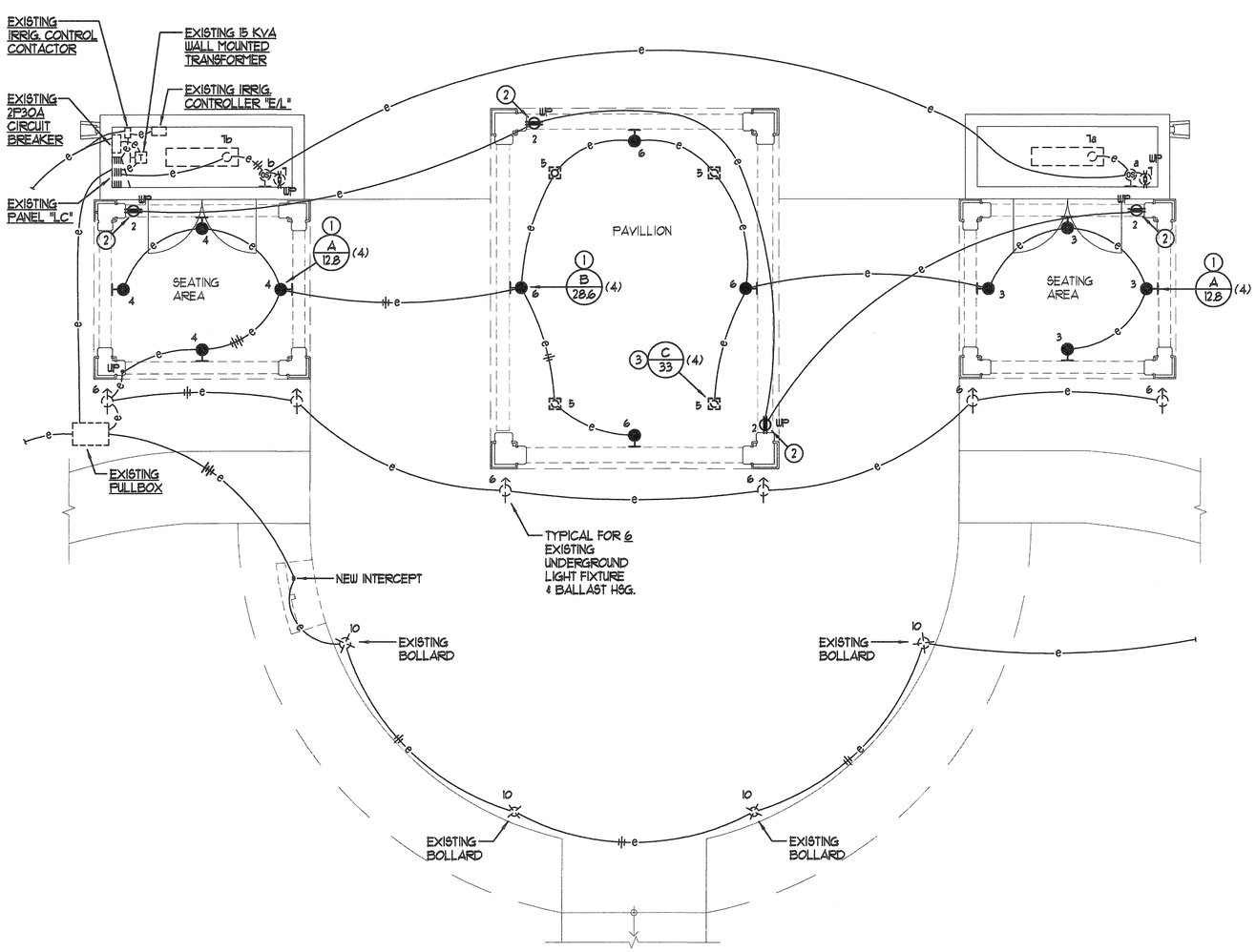

1 / E-3 NEW ELECTRICAL PLAN
SCALE: 1/4" = 1' - 0"

ELECTRICAL NOTES: NEW WORK

1. PROVIDE NEW WALL MOUNTED FIXTURE OVER EXISTING FLUSH OUTLET. VERIFY EXISTENCE OF WIRING. IF NOT EXISTING, PROVIDE NEW.
2. PROVIDE NEW GFCI RECEPTACLE AND CAST METAL WHILE-IN-USE COVER. MOUNT ON EXISTING FLUSH OUTLET BOX. CONNECT TO EXISTING WIRES.
3. PROVIDE NEW CEILING RECESSED LIGHTING FIXTURE IN NEW CEILING. SEE ARCH. FOR LOCATION.

GRAPHIC SCALE

0 1' 2' 4' 6' 8' 12'

SCALE: 1/4"=1'-0"

REVISION NO.	SYM.	DESCRIPTION	SHT. OF.	DATE	APPROVED

BRIAN T. ITOZAKI
LICENSED PROFESSIONAL ENGINEER
No. 9058-E
HAWAII, U.S.A.

THIS WORK WAS PREPARED BY ME OR UNDER MY SUPERVISION AND CONSTRUCTION OF THIS PROJECT WILL BE UNDER MY OBSERVATION.

SIGNATURE

EXPIRATION DATE OF THE LICENSE: 04/30/16

STATE OF HAWAII
DEPARTMENT OF DEFENSE
OFFICE OF VETERANS SERVICES

COMMITTAL SHELTER ROOF & CEILING REPAIRS AND MISCELLANEOUS IMPROVEMENTS
HAWAII STATE VETERANS CEMETERY
KANEOHE, OAHU, HAWAII

NEW ELECTRICAL PLAN

H & O - III, INC.		JOB NO. CA-1516-C	DRAWING NO. E-3
DRAWN BY: K.N.		DATE: FEB. 2016	SHEET 15 of 15
SCALE: AS INDICATED			

368.237