INDEX TO DRAWINGS:

SHEET NO.	DRAWING NO.	DESCRIPTION
1	T-1	TITLE SHEET, INDEX, PLOT PLAN, AND SITE MAP
2	T-2	GENERAL NOTES AND LEGEND
3	C-1	EXISTING TOPOGRAPHY PLAN (STA. 0+00 TO 4+50)
4	C-2	EXISTING TOPOGRAPHY PLAN (STA. 4+50 TO 7+75)
5	C-3	EXISTING TOPOGRAPHY PLAN (STA. 7+75 TO 12+90.98)
6	C-4	DEMOLITION AND PAVEMENT EXCAVATION PLAN
7	C-5	DEMOLITION AND PAVEMENT EXCAVATION PLAN
8	C-6	PAVEMENT AND GRADING PLAN (STA. 0+00 TO 4+50)
9	C-7	PAVEMENT AND GRADING PLAN (STA. 4+50 TO 7+75)
10	C-8	PAVEMENT AND GRADING PLAN (STA. 7+75 TO 12+90.98)
11	C-9	ACCESS ROAD HORIZONTAL CONTROL PLAN AND PROFILE
12	C-10	SIGNING AND STRIPING PLAN (STA. 0+00 TO 6+68)
13	C-11	SIGNING AND STRIPING PLAN (STA. 6+68 TO 12+90.98)
14	C-12	CIVIL DETAILS I
15	C-13	CIVIL DETAILS II
16	C-14	CIVIL DETAILS III
17	C-15	CROSS SECTIONS – DRAINAGE CULVERTS
18	C-16	CROSS SECTIONS – PAVEMENT SECTIONS
19	C-17	LIGHT POLE FOUNDATIONS
20	C-18	CONSTRUCTION PHASING AND STAGING
21	C-19	GUARDRAIL DETAILS AND NOTES
22	EC-1	EROSION CONTROL NOTES
23	EC-2	EROSION CONTROL PLAN
24	EC-3	EROSION CONTROL DETAILS
25	TC-1	TRAFFIC CONTROL PLAN
26	E-1	ELECTRICAL SYMBOLS, LUMINAIRE SCHEDULE PARKING LOT LIGHT POLE DETAILS
27	E-2	ELECTRICAL SITE PLAN DUCT SECTIONS
28	E-3	ELECTRICAL PLAN – BUILDING

NOTES:
FOR ADDITIVE ALTERNATE INSTRUCTIONS - SEE SPECIFICATION SECTION 01230.
FOR DESCRIPTIONS OF ADDITIVE ALTERNATE - SEE DRAWING NO. C-7, C-19 AND SPECIFICATION SECTION 16000.

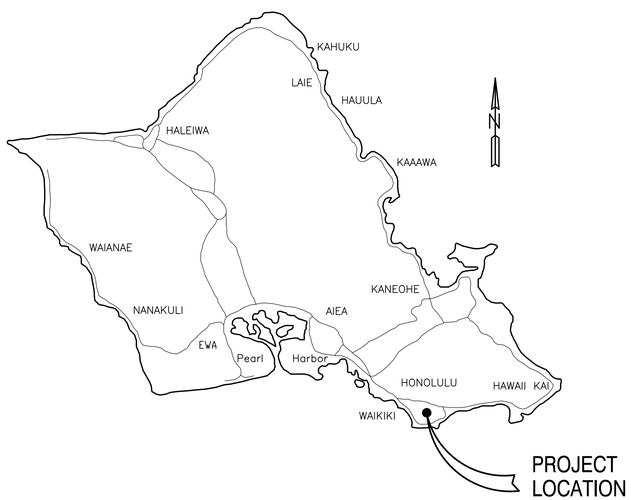

LOCATION MAP
NOT TO SCALE

REPAIR AND RESURFACE ACCESS ROAD AND PARKING LOT, BIRKHIMER EOC

JOB No. CA-1325-C

TAX MAP KEY: 3-1-042:006

FOR THE

STATE OF HAWAII, DEPARTMENT OF DEFENSE

HAWAII EMERGENCY MANAGEMENT AGENCY

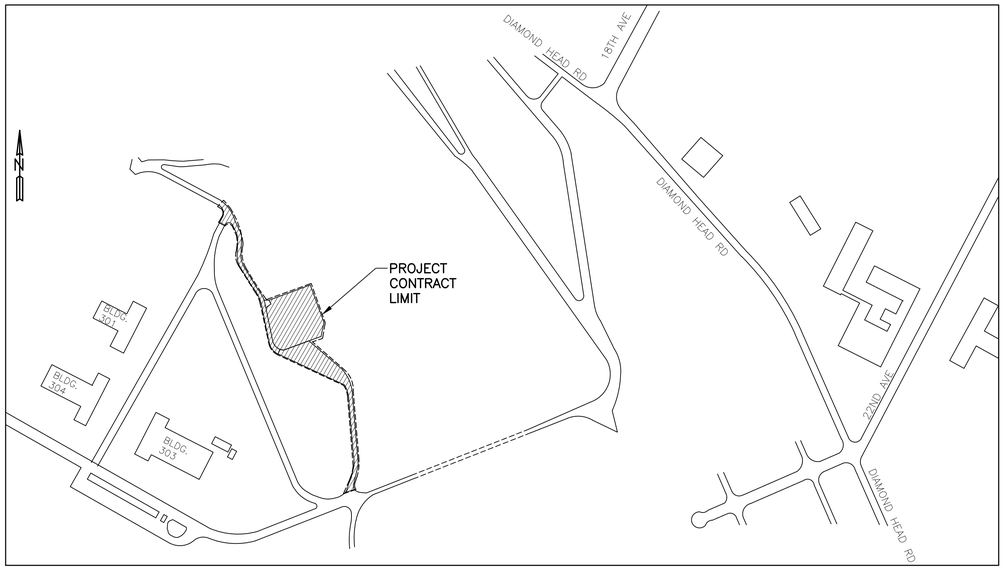

SITE MAP
NOT TO SCALE

APPROVED:

ADJUTANT GENERAL — DATE
DEPARTMENT OF DEFENSE
STATE OF HAWAII

ADMINISTRATOR — DATE
HAWAII EMERGENCY MANAGEMENT AGENCY
DEPARTMENT OF DEFENSE
STATE OF HAWAII

CHIEF ENGINEERING OFFICER — DATE
DEPARTMENT OF DEFENSE, ENGINEERING OFFICE
STATE OF HAWAII

REVISION NO.	SYM.	DESCRIPTION	SHT OF	DATE	APPROVED:

PERICLES M. MANTHOS
LICENSED PROFESSIONAL ENGINEER
No. 7833-C
HAWAII, U.S.A.

License Expiration Date 04-30-18

THIS WORK WAS PREPARED BY ME OR UNDER MY SUPERVISION AND CONSTRUCTION OF THIS PROJECT WILL BE UNDER MY OBSERVATION AS DEFINED IN HAR TITLE 16, CHAPTER 115, RULES OF THE BOARD OF PROFESSIONAL ENGINEERS, ARCHITECTS AND SURVEYORS, STATE OF HAWAII

Signature — Date 01-23-18

DEPARTMENT OF DEFENSE
STATE OF HAWAII

REPAIR AND RESURFACE ACCESS ROAD AND PARKING LOT, BIRKHIMER EOC
HONOLULU, OAHU, HAWAII

MANTHOS ENGINEERING, LLC

DESIGNED BY: KM	CHECKED BY: MO	JOB NO. CA-1325-C	DRAWING NO. T-1
DRAWN BY: KM	APPROVED BY: PM	DATE JAN, 2018	SHEET 1 OF 28 SHEETS
SCALE:			

\\LAKE-FILES\PK\Company\Projects - Civil Design\DOD Birkhimer Parking Lot and Access Road\Additional Work\100%\1_Submittal\SHT 01-02_Birkhimer5-TITLE_NOTES-RL.dwg, 1/23/2018 11:07:19 AM, DWG To PDF.pc3

GENERAL NOTES

1. THE CONTRACTOR SHALL COORDINATE ALL WORK, INCLUDING ACCESS, PARKING AND STAGING AREA, WITH THE ENGINEER.
2. THE PRIME CONTRACTOR AND/OR SUBCONTRACTOR SHALL SIGN IN AT THE BIRKHIMER EOC UPON ARRIVAL TO THE JOBSITE ON A DAILY BASIS, UNLESS OTHERWISE DIRECTED BY THE ENGINEER.
3. THE EMERGENCY OPERATIONS CENTER (EOC) POINT OF CONTACT IS MR. RYAN HIRAE, 733–4300, X 531.
4. IN THE EVENT AN "ALL HAND'S" EMERGENCY OPERATIONS CENTER ACTIVATION, THE CONTRACTOR STOP WORK AND VACATE THE SITE UNTIL AN ALL CLEAR IS GIVEN BY THE ENGINEER.
5. THE CONTRACTOR SHALL NOT BE ALLOWED TO USE THE EOC RESTROOMS. THE CONTRACTOR SHALL PROVIDE THEIR OWN PORTABLE TOILETS.
6. PROJECT SHALL BE IN ACCORDANCE WITH THE PROJECT PLANS AND SPECIFICATIONS (BASED ON THE STATE OF HAWAII, DEPARTMENT OF TRANSPORTATION AND THE CITY & COUNTY OF HONOLULU STANDARD SPECS/DETAILS).
7. VERIFY AND CHECK ALL DIMENSIONS AND DETAILS ON THE CONSTRUCTION DRAWINGS. ANY DISCREPANCY SHALL IMMEDIATELY BE BROUGHT TO THE ATTENTION OF THE ENGINEER.
8. ALL ELEVATIONS AND DISTANCES SHOWN ON THE PLANS ARE IN FEET.
9. WORK INCIDENTAL TO THE CONTRACTOR AND NECESSARY TO COMPLETE THE PROJECT, ALTHOUGH NOT SPECIFICALLY REFERRED TO ON THE CONTRACT DOCUMENTS, SHALL BE FURNISHED AND PERFORMED BY THE CONTRACTOR AT NO ADDITIONAL COST TO THE STATE.
10. THE CONTRACTOR SHALL EXERCISE CARE AND CAUTION TO AVOID DAMAGE TO AND IMPAIRMENT OF THE USE OF ANY EXISTING UTILITY LINE. ANY DAMAGE INFLICTED ON THE EXISTING UTILITY LINES RESULTING FROM THE CONTRACTOR'S OPERATIONS SHALL BE IMMEDIATELY REPAIRED OR RESTORED AS DIRECTED BY THE ENGINEER AT THE CONTRACTOR'S EXPENSE.
11. THE CONTRACTOR SHALL ASSUME SOLE AND COMPLETE RESPONSIBILITY FOR THE JOB SITE CONDITIONS AFFECTED BY THEIR CONSTRUCTION ACTIVITIES DURING THE COURSE OF THE CONSTRUCTION OF THIS PROJECT, INCLUDING THE SAFETY OF ALL PERSONS AND PROPERTY; AND THAT THIS REQUIREMENT SHALL BE APPLY CONTINUOUSLY AND NOT BE LIMITED TO NORMAL WORKING HOURS; AND THAT THE CONTRACTOR SHALL DEFEND, INDEMNIFY AND HOLD THE STATE HARMLESS FROM ANY AND ALL LIABILITY, REAL OR ALLEGED, IN CONNECTION WITH THE PERFORMANCE OF WORK ON THIS PROJECT, EXCEPT FOR LIABILITY ARISING FROM THE SOLE NEGLIGENCE OF THE STATE.
12. THE CONTRACTOR, AT HIS OWN EXPENSE, SHALL KEEP THE PROJECT AREA AND SURROUNDING AREA FREE FROM RUBBISH, DUST, NOISE, EROSION, ETC. THE WORK SHALL BE DONE IN CONFORMANCE WITH THE AIR AND WATER POLLUTION CONTROL STANDARDS AND REGULATIONS OF THE STATE DEPARTMENT OF HEALTH.
13. ALL UNUSABLE OR SURPLUS MATERIAL SHALL BE PROPERLY DISPOSED OF BY THE CONTRACTOR.
14. THE CONTRACTOR SHALL RESTORE ALL AREAS DISTURBED BY CONSTRUCTION ACTIVITIES TO ITS ORGINAL CONDITION, INCLUDING BUT NOT LIMITED TO THE STAGING AREA.
15. THE CONTRACTOR SHALL OBTAIN ALL REQUIRED PERMITS FROM APPROPRIATE GOVERNMENT AGENCIES.
16. ALL CONSTRUCTION WORK SHALL BE DONE IN ACCORDANCE WITH THE AMERICANS WITH DISABILITIES ACT ACCESSIBILITY GUIDELINES (ADAAG). THE CONTRACTOR SHALL PROVIDE, INSTALL, AND MAINTAIN ALL NECESSARY SIGNS AND OTHER PROTECTIVE FACILITIES WHICH SHALL CONFORM WITH THE ADAAG.
17. CONTRACTOR SHALL NOT PERFORM ANY CONSTRUCTION ACTIVITY THAT WILL CAUSE FALLING ROCK, SOIL, OR DEBRIS IN ANY FORM TO FALL, SLIDE OR FLOW ONTO ADJOINING PROPERTIES, STREETS, OR NATURAL WATERCOURSES. SHOULD SUCH VIOLATIONS OCCUR, THE CONTRACTOR SHALL IMMEDIATELY MAKE ALL REMEDIAL ACTIONS NECESSARY AT NO ADDITIONAL COST TO THE STATE.
18. THE CONTRACTOR SHALL BE RESPONSIBLE FOR CONFORMANCE WITH THE APPLICABLE PROVISIONS OF THE WATER QUALITY AND WATER POLLUTION CONTROL STANDARDS CONTAINED IN HAWAII ADMINISTRATIVE RULES, TITLE 11, CHAPTER 55, "WATER POLLUTION CONTROL", AS WELL AS CHAPTER 14 OF THE REVISED ORDINANCES OF HONOLULU, AS AMENDED. BEST MANAGEMENT PRACTICES SHALL BE EMPLOYED AT ALL TIMES DURING CONSTRUCTION.
19. PURSUANT TO CHAPTER 6E, HRS, IN THE EVENT ANY ARTIFACTS OR HUMAN REMAINS ARE UNCOVERED DURING CONSTRUCTION OPERATIONS, THE CONTRACTOR SHALL IMMEDIATELY SUSPEND WORK AND NOTIFY THE STATE DEPARTMENT OF LAND AND NATURAL RESOURCES – HISTORIC PRESERVATION DIVISION (692–8015).
20. THE CONTRACTOR SHALL PROVIDE 14 DAYS NOTICE TO THE OWNER PRIOR TO FIELD MOBILIZATION. ACCESS TO THE MAIN EOC ENTRANCE SHALL BE PROVIDED AT ALL TIMES UNLESS THE OWNER IS OTHERWISE PROVIDED FOR SATISFACTORILY.
21. THE CONTRACTOR TO MAINTAIN PEDESTRIAN ACCESS DURING WORKING AND NON–WORKING HOURS.
22. THE CONTRACTOR IS RESPONSIBLE FOR NOTIFYING OWNER AND TO SHUTDOWN VEHICLE ACCESS TO THEIR PROPERTIES DURING NON–WORKING HOURS.
23. INSPECT AND CLEAN ALL DRAIN LINES BY REMOVING ALL FREE/LOOSE DEBRIS INSIDE OF DRAINAGE PIPES, CULVERTS, AND TRENCHES.

CONSTRUCTION NOTES

1. ALL APPLICABLE CONSTRUCTION WORK SHALL BE DONE IN ACCORDANCE WITH THE "HAWAII STANDARD SPECIFICATIONS FOR ROAD, BRIDGE, AND PUBLIC WORKS CONSTRUCTION", 2005 AND "STANDARD DETAILS FOR PUBLIC WORKS CONSTRUCTION", SEPTEMBER 1984, AS AMENDED, OF KAUAI, MAUI, AND HAWAII, AND "STANDARD SPECIFICATIONS FOR PUBLIC WORKS CONSTRUCTION", SEPTEMBER 1986.
2. AZIMUTHS AND COORDINATES ARE REFERRED TO GOVERNMENT SURVEY TRIANGULATION STATION "LEAHI".

SIGNS AND MARKINGS NOTES

1. ALL TRAFFIC SIGN AND PAVEMENT MARKING INSTALLATIONS SHALL BE DONE IN ACCORDANCE WITH THE "MANUAL ON UNIFORM TRAFFIC CONTROL DEVICES FOR STREETS AND HIGHWAYS", 2009 EDITION, AS AMENDED, THE LATEST SPECIFICATIONS FROM THE TRAFFIC REVIEW BRANCH, DEPARTMENT OF PLANNING & PERMITTING AND AS SHOWN ON THE PLANS.
2. THE SIGNING AND/OR STRIPING CONTRACTOR SHALL KEEP ONE (1) SET OF APPROVED PLANS AT THE PROJECT SITE AT ALL TIMES DURING CONSTRUCTION WORK.
3. CONTRACTOR SHALL PROVIDE TEMPORARY GUIDELINES AND OUTLINE OF ARROWS, LEGENDS, AND CROSSWALKS ON THE DAY THE ROADWAY AND/OR PARKING LOT IS OPENED TO TRAFFIC. THESE MARKING SHALL BE APPROVED BY THE ENGINEER.
4. UPON FINAL INSPECTION OF THE PROJECT, THE CONTRACTOR SHALL SUBMIT A LETTER OF CERTIFICATION FOR ALL TRAFFIC SIGNING AND PAVEMENT MARKING MATERIALS INSTALLED.
5. SIGNS SHALL BE ATTACHED TO BRACKETS WITH 5/16" THEFT RESISTANT STAINLESS STEEL BOLTS, NUTS AND WASHERS. SIGNS 48" WIDE OR LARGER THAN 10 SQ. FT. IN AREA SHALL BE MOUNTED ON TWO–2" GALV. PIPE POST. THE SIGN SHALL BE INSTALLED WITH AT LEAST ONE (1) FOOT CLEARANCE FROM THE SIGN EDGE TO EDGE OF PAVEMENT.
6. ALL TRAFFIC SIGNS SHALL BE REFLECTORIZED.
7. LOCATION OF "STOP" SIGNS:
   A. INSTALL "STOP" SIGN AS SHOWN ON THE PLANS.
   B. FINAL LOCATION OF STOP LINE SHALL BE APPROVED BY THE ENGINEER PRIOR TO INSTALLATION.
8. THE CONTRACTOR SHALL USE THERMOPLASTIC MATERIAL APPROVED BY THE ENGINEER FOR ALL TRAFFIC STRIPING AND RESTRIPING DUE TO CONSTRUCTION OPERATIONS.

PAVEMENT MARKING LEGEND

————————	NEW AC EDGE
- - - - - - - - - - - - - -	EXISTING AC EDGE
————————	EDGE LINE
—— - —— - ——	BASE LINE
////////////////	REMOVE EXISTING PAVEMENT MARKINGS

LEGEND AND ACRONYMS

Δ	INTERIOR ANGLE
R	RADIUS, CURVE
T	TANGENT LENGTH
L	LENGTH OF CURVE
C	LONG CHORD
PC	POINT OF CURVATURE
PT	POINT OF TANGENCY
℄	BASE LINE

DEFINITIONS

DOD	DEPARTMENT OF DEFENSE
EOC	EMERGENCY OPERATIONS CENTER
OWER	STATE DOD BIRKHIMER EOC

REVISION NO.	SYM.	DESCRIPTION	SHT OF	DATE	APPROVED:

PERICLES M. MANTHOS
LICENSED PROFESSIONAL ENGINEER
No. 7833–C
HAWAII, U.S.A.

License Expiration Date 04–30–18

THIS WORK WAS PREPARED BY ME OR UNDER MY SUPERVISION AND CONSTRUCTION OF THIS PROJECT WILL BE UNDER MY OBSERVATION AS DEFINED IN HAR TITLE 16, CHAPTER 115, RULES OF THE BOARD OF PROFESSIONAL ENGINEERS, ARCHITECTS AND SURVEYORS, STATE OF HAWAII

Signature 01–23–18 Date

DEPARTMENT OF DEFENSE
STATE OF HAWAII

REPAIR AND RESURFACE ACCESS ROAD AND PARKING LOT, BIRKHIMER EOC
HONOLULU, OAHU, HAWAII

MANTHOS ENGINEERING, LLC

DESIGNED BY:	CHECKED BY:	JOB NO.	DRAWING NO.
KM	MO	CA–1325–C	T-2
DRAWN BY: KM	APPROVED BY: PM	DATE JAN, 2018	SHEET 2 OF 28 SHEETS
SCALE:			

\\ME-FILES\PC\Company\Projects - Civil Design\DOD Birkhimer Parking Lot and Access Road\Additional Work\100%\R1_Submittal\SHT 01-02_Birkhimer5-TITLE_NOTES-R1.dwg 1/23/2018 11:14:13 AM, DWG To PDF.pc3

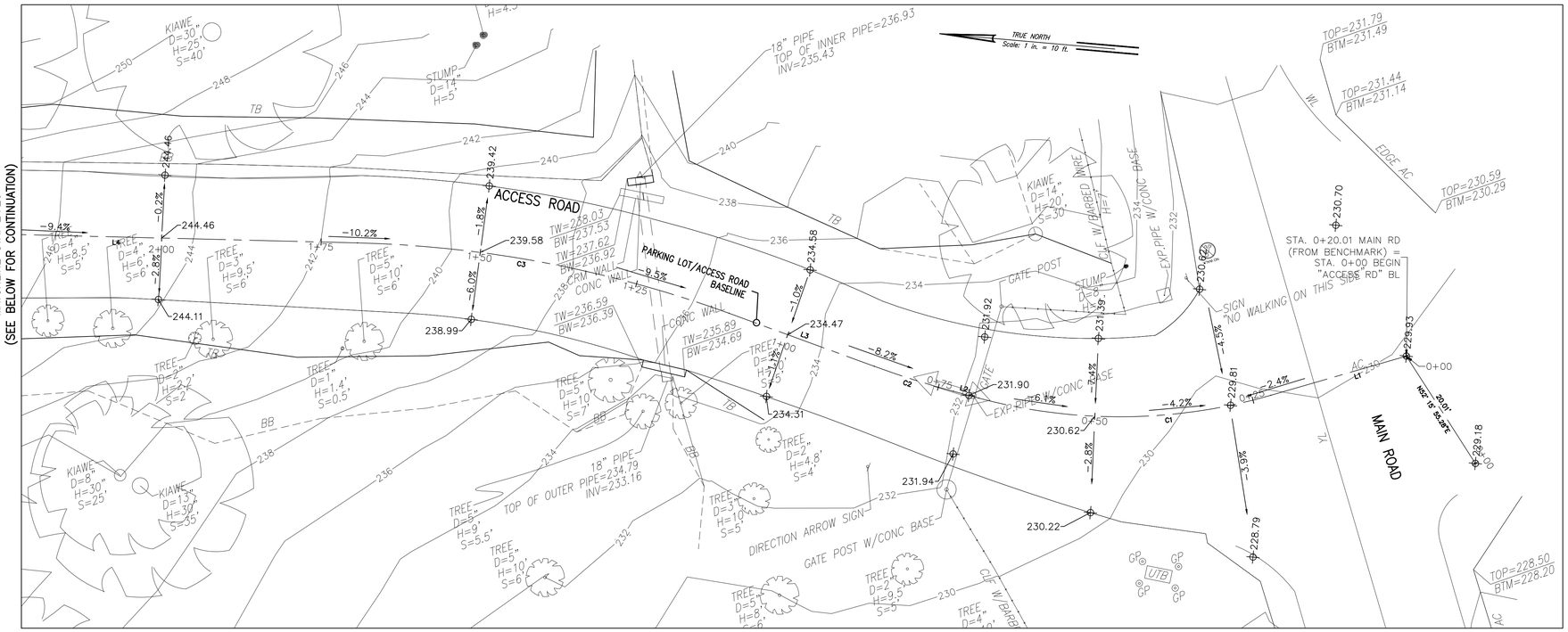

EXISTING ACCESS ROAD TOPOGRAPHY PLAN

SCALE: 1" = 10'

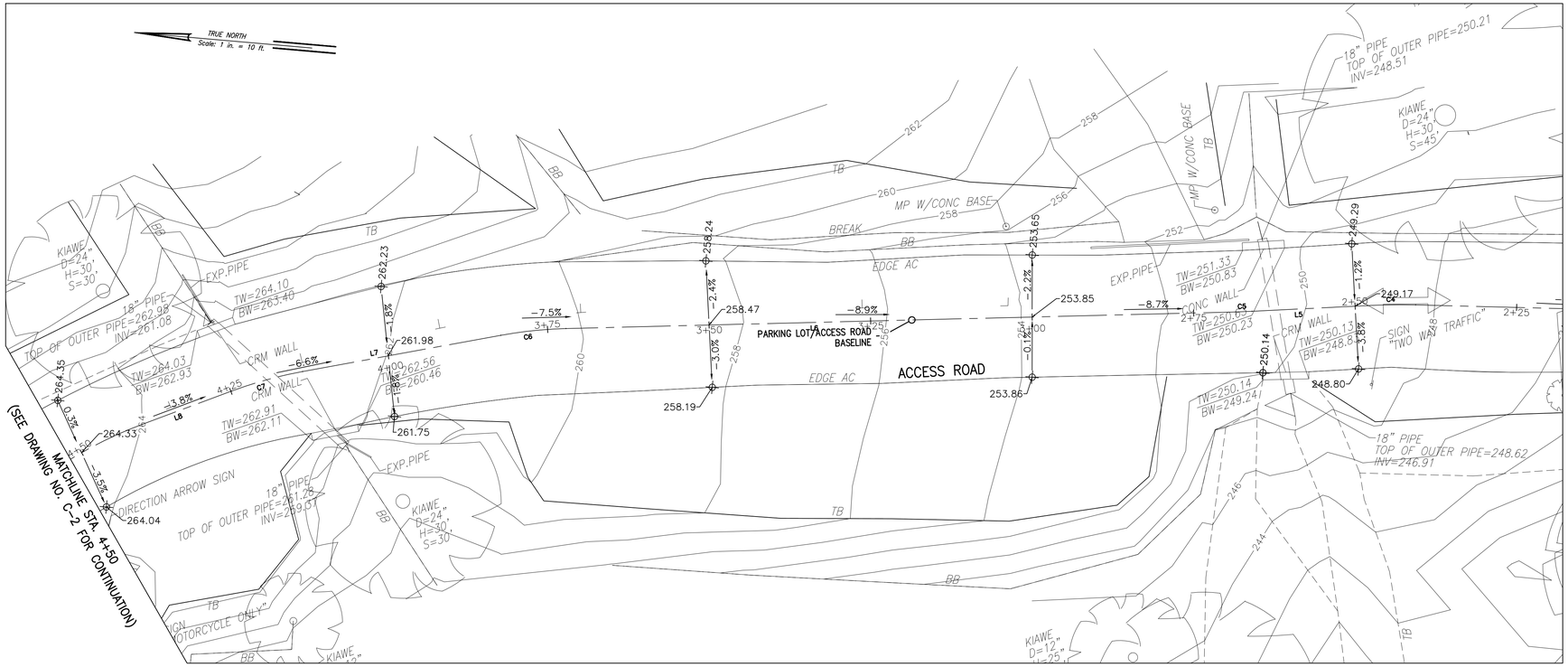

EXISTING ACCESS ROAD TOPOGRAPHY PLAN

SCALE: 1" = 10'

ABBREVIATIONS:

ADA	AMERICANS WITH DISABILITIES ACT
AC	ASPHALTIC CONCRETE
BB	BOTTOM BANK
BL	BLUE LINE (PAVEMENT STRIPING)
BP	BOLLARD POST
BTM	BOTTOM
BW	BOTTOM WALL
CLF	CHAIN LINK FENCE
CMU	CONCRETE MASONRY UNIT
CONC	CONRETE
CRM	CONCRETE ROCK MASONRY
D	DIAMETER
EB	ELECTRIC BOX
EP	ELECTRIC POLE
EXP	EXPOSED
FF	FINISHED FLOOR
FH	FIRE HYDRANT
H	HEIGHT
HR	HANDRAIL
INV	INVERT
MH	MANHOLE
SCO	SEWER CLEAN OUT
SMH	SEWER MANHOLE
TB	TOP BANK
TEL	TELEPHONE
TW	TOP WALL
UTB	UTILITY BOX
WB	WATER BIB
WL	WHITE LINE (PAVEMENT STRIPING)
WM	WATER METER
WMH	WATER MANHOLE
WV	WATER VALVE
YL	YELLOW LINE (PAVEMENT STRIPING)

LEGEND:
(EXISTING)

ADA PARKING SPACE	
CONTOUR LINE	265
CHAIN LINK FENCE	
CONCRETE PAVEMENT	
EXIST. ELEVATION	+248.25
FIRE HYDRANT	
HANDICAP RAMP	
MANHOLE STRUCTURE	
PAVEMENT MARKING	
SIGN POST	
SLOPE (DOWN)	−1.5%
SPOT ELEVATION	263.63
SURVEY BENCHMARK	
TREE/SHRUB/HEDGE/ STUMP	
UTILITY BOX	
WHEEL STOP	
BASE LINE	

GRAPHIC SCALE
10' 0 10' 20'
SCALE: 1"=10'

REVISION NO.	SYM.	DESCRIPTION	SHT OF	DATE	APPROVED:

PERICLES M. MANTHOS
LICENSED PROFESSIONAL ENGINEER
No. 7833-C
HAWAII, U.S.A.

License Expiration Date 04-30-18

THIS WORK WAS PREPARED BY ME OR UNDER MY SUPERVISION AND CONSTRUCTION OF THIS PROJECT WILL BE UNDER MY OBSERVATION AS DEFINED IN HAR TITLE 16, CHAPTER 115, RULES OF THE BOARD OF PROFESSIONAL ENGINEERS, ARCHITECTS AND SURVEYORS, STATE OF HAWAII

Signature 01-23-18 Date

DEPARTMENT OF DEFENSE
STATE OF HAWAII

REPAIR AND RESURFACE ACCESS ROAD AND PARKING LOT, BIRKHIMER EOC
HONOLULU, OAHU, HAWAII

EXISTING ACCESS ROAD TOPOGRAPHY PLAN

MANTHOS ENGINEERING, LLC		JOB NO. CA-1325-C	DRAWING NO. C-1
DESIGNED BY: KM	CHECKED BY: MO		
DRAWN BY: KM	APPROVED BY: PM	DATE JAN, 2018	SHEET 3 OF 28 SHEETS
SCALE:			

\\AE-FILES\PC\Company\Projects - Civil Design\DOD Birkhimer Parking Lot and Access Road\Additional Work\L0090\L_Submittal\SHT 03-05_Birkhimer\5-EX TOPO-R1.dwg, 1/23/2018 11:27:38 AM, DWG To PDF.pc3

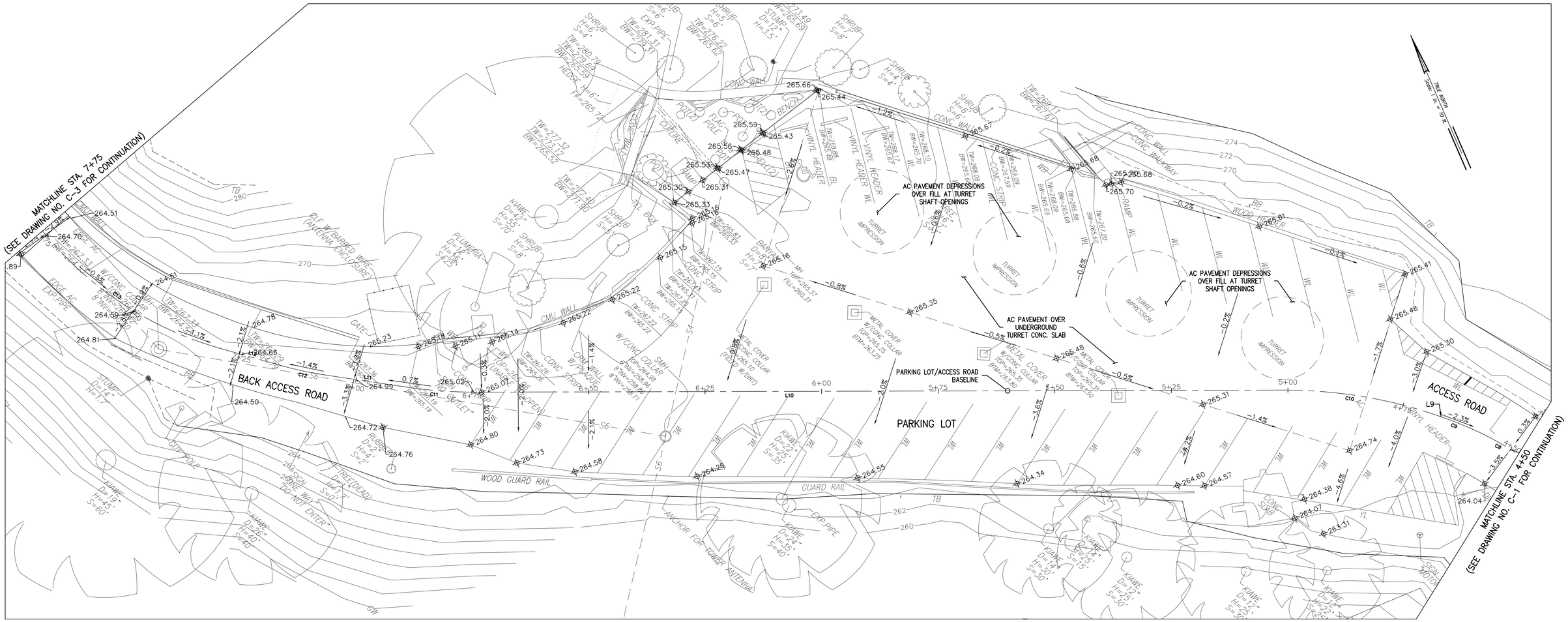

EXISTING PARKING LOT TOPOGRAPHY PLAN

SCALE: 1" = 10'

ABBREVIATIONS:

ADA	AMERICANS WITH DISABILITIES ACT
AC	ASPHALTIC CONCRETE
BB	BOTTOM BANK
BL	BLUE LINE (PAVEMENT STRIPING)
BP	BOLLARD POST
BTM	BOTTOM
BW	BOTTOM WALL
CLF	CHAIN LINK FENCE
CMU	CONCRETE MASONRY UNIT
CONC	CONRETE
CRM	CONCRETE ROCK MASONRY
D	DIAMETER
EB	ELECTRIC BOX
EP	ELECTRIC POLE
EXP	EXPOSED
FF	FINISHED FLOOR
FH	FIRE HYDRANT
H	HEIGHT
HR	HANDRAIL
INV	INVERT
MH	MANHOLE
SCO	SEWER CLEAN OUT
SMH	SEWER MANHOLE
TB	TOP BANK
TEL	TELEPHONE
TW	TOP WALL
UTB	UTILITY BOX
WB	WATER BIB
WL	WHITE LINE (PAVEMENT STRIPING)
WM	WATER METER
WMH	WATER MANHOLE
WV	WATER VALVE
YL	YELLOW LINE (PAVEMENT STRIPING)

LEGEND:
(EXISTING)

ADA PARKING SPACE	
CONTOUR LINE	265
CHAIN LINK FENCE	
CONCRETE PAVEMENT	
EXIST. ELEVATION	+248.25
FIRE HYDRANT	
HANDICAP RAMP	
MANHOLE STRUCTURE	
PAVEMENT MARKING	
SIGN POST	
SLOPE (DOWN)	-1.5%
SPOT ELEVATION	263.63
SURVEY BENCHMARK	
TREE/SHRUB/HEDGE/ STUMP	
UTILITY BOX	
WHEEL STOP	
BASE LINE	

GRAPHIC SCALE

10' 0 10' 20'

SCALE: 1"=10'

REVISION NO.	SYM.	DESCRIPTION	SHT OF	DATE	APPROVED:

PERICLES M. MANTHOS
LICENSED PROFESSIONAL ENGINEER
No. 7833-C
HAWAII, U.S.A.

License Expiration Date 04-30-18

THIS WORK WAS PREPARED BY ME OR UNDER MY SUPERVISION AND CONSTRUCTION OF THIS PROJECT WILL BE UNDER MY OBSERVATION AS DEFINED IN HAR TITLE 16, CHAPTER 115, RULES OF THE BOARD OF PROFESSIONAL ENGINEERS, ARCHITECTS AND SURVEYORS, STATE OF HAWAII

Signature 01-23-18 Date

DEPARTMENT OF DEFENSE
STATE OF HAWAII

REPAIR AND RESURFACE ACCESS ROAD AND PARKING LOT, BIRKHIMER EOC
HONOLULU, OAHU, HAWAII

EXISTING PARKING LOT TOPOGRAPHY PLAN

MANTHOS ENGINEERING, LLC

DESIGNED BY: KM	CHECKED BY: MO	JOB NO. CA-1325-C	DRAWING NO. C-2
DRAWN BY: KM	APPROVED BY: PM	DATE JAN, 2018	SHEET 4 OF 28 SHEETS
SCALE:			

\\AE-FILESVR\Company\Projects - Civil Design\DOD Birkhimer Parking Lot and Access Road\Additional Work\L0D9A2L_Submittal\SHT 03-05_Birkhimer5-EX TOPO-R1.dwg, 1/23/2018 11:19:39 AM, DWG To PDF.pc3

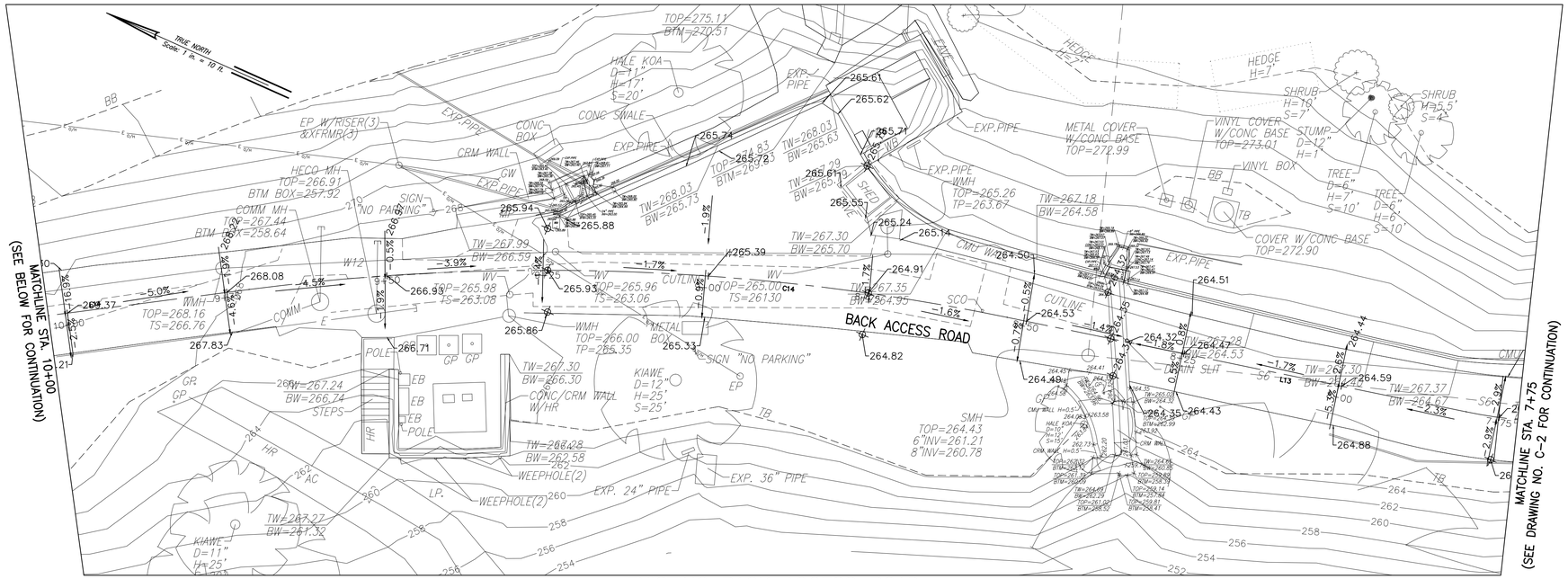

EXISTING BACK ACCESS ROAD
TOPOGRAPHY PLAN
SCALE: 1" = 10'

ABBREVIATIONS:

ADA	AMERICANS WITH DISABILITIES ACT
AC	ASPHALTIC CONCRETE
BB	BOTTOM BANK
BL	BLUE LINE (PAVEMENT STRIPING)
BP	BOLLARD POST
BTM	BOTTOM
BW	BOTTOM WALL
CLF	CHAIN LINK FENCE
CMU	CONCRETE MASONRY UNIT
CONC	CONCRETE
CRM	CONCRETE ROCK MASONRY
D	DIAMETER
EB	ELECTRIC BOX
EP	ELECTRIC POLE
EXP	EXPOSED
FF	FINISHED FLOOR
FH	FIRE HYDRANT
H	HEIGHT
HR	HANDRAIL
INV	INVERT
MH	MANHOLE
SCO	SEWER CLEAN OUT
SMH	SEWER MANHOLE
TB	TOP BANK
TEL	TELEPHONE
TW	TOP WALL
UTB	UTILITY BOX
WB	WATER BIB
WL	WHITE LINE (PAVEMENT STRIPING)
WM	WATER METER
WMH	WATER MANHOLE
WV	WATER VALVE
YL	YELLOW LINE (PAVEMENT STRIPING)

LEGEND:
(EXISTING)

- ADA PARKING SPACE
- CONTOUR LINE — 265
- CHAIN LINK FENCE
- CONCRETE PAVEMENT
- EXIST. ELEVATION +248.25
- FIRE HYDRANT
- HANDICAP RAMP
- MANHOLE STRUCTURE
- PAVEMENT MARKING
- SIGN POST
- SLOPE (DOWN) —1.5%
- SPOT ELEVATION 263.63
- SURVEY BENCHMARK
- TREE/SHRUB/HEDGE/ STUMP
- UTILITY BOX
- WHEEL STOP
- BASE LINE

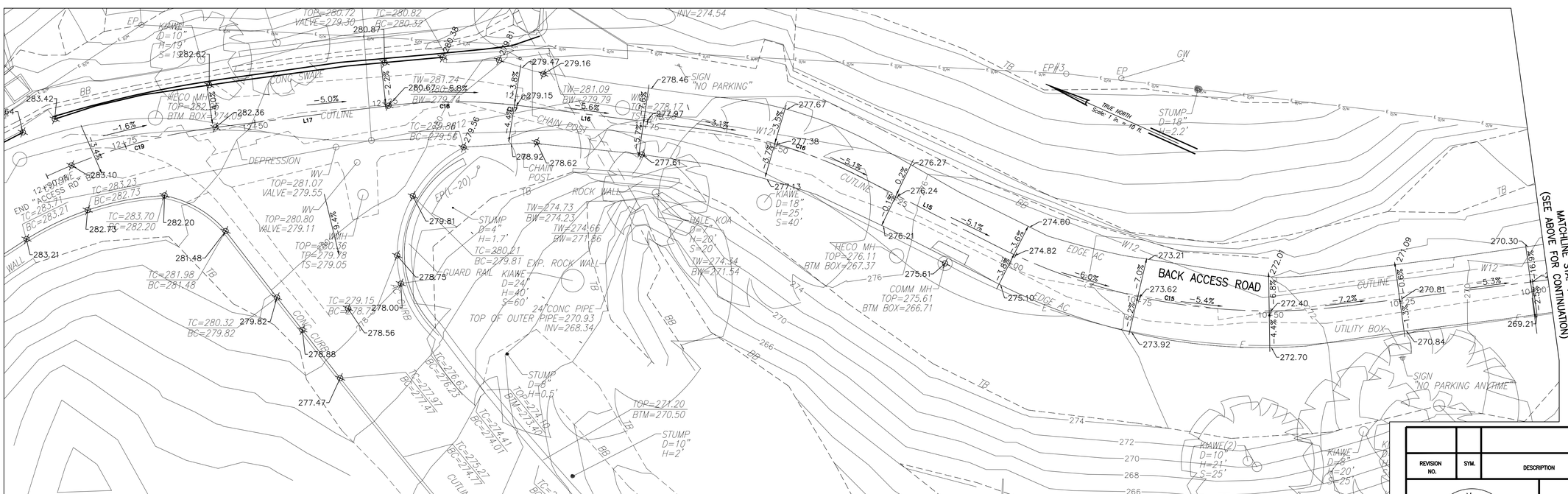

EXISTING BACK ACCESS ROAD
TOPOGRAPHY PLAN
SCALE: 1" = 10'

GRAPHIC SCALE
10' 0 10' 20'
SCALE: 1"=10'

REVISION NO.	SYM.	DESCRIPTION	SHT OF	DATE	APPROVED:

PERICLES M. MANTHOS
LICENSED PROFESSIONAL ENGINEER
No. 7833-C
HAWAII, U.S.A.

License Expiration Date 04-30-18

THIS WORK WAS PREPARED BY ME OR UNDER MY SUPERVISION AND CONSTRUCTION OF THIS PROJECT WILL BE UNDER MY OBSERVATION AS DEFINED IN HAR TITLE 16, CHAPTER 115, RULES OF THE BOARD OF PROFESSIONAL ENGINEERS, ARCHITECTS AND SURVEYORS, STATE OF HAWAII

Signature 01-23-18 Date

DEPARTMENT OF DEFENSE
STATE OF HAWAII

REPAIR AND RESURFACE ACCESS ROAD AND PARKING LOT, BIRKHIMER EOC
HONOLULU, OAHU, HAWAII

EXISTING BACK ROAD TOPOGRAPHY PLAN

MANTHOS ENGINEERING, LLC

DESIGNED BY: KM	CHECKED BY: MO	JOB NO. CA-1325-C	DRAWING NO. C-3
DRAWN BY: KM	APPROVED BY: PM	DATE JAN, 2018	SHEET 5 OF 28 SHEETS
SCALE:			

\\NE-FILESVR\Company\Projects - Civil Design\DOD Birkhimer Parking Lot and Access Road\Additional Work\100%\BL_Submittal\SHT 03-05_Birkhimer5-EX TOPO-R1.dwg, 1/23/2018 11:20:00 AM, DWG To PDF.pc3

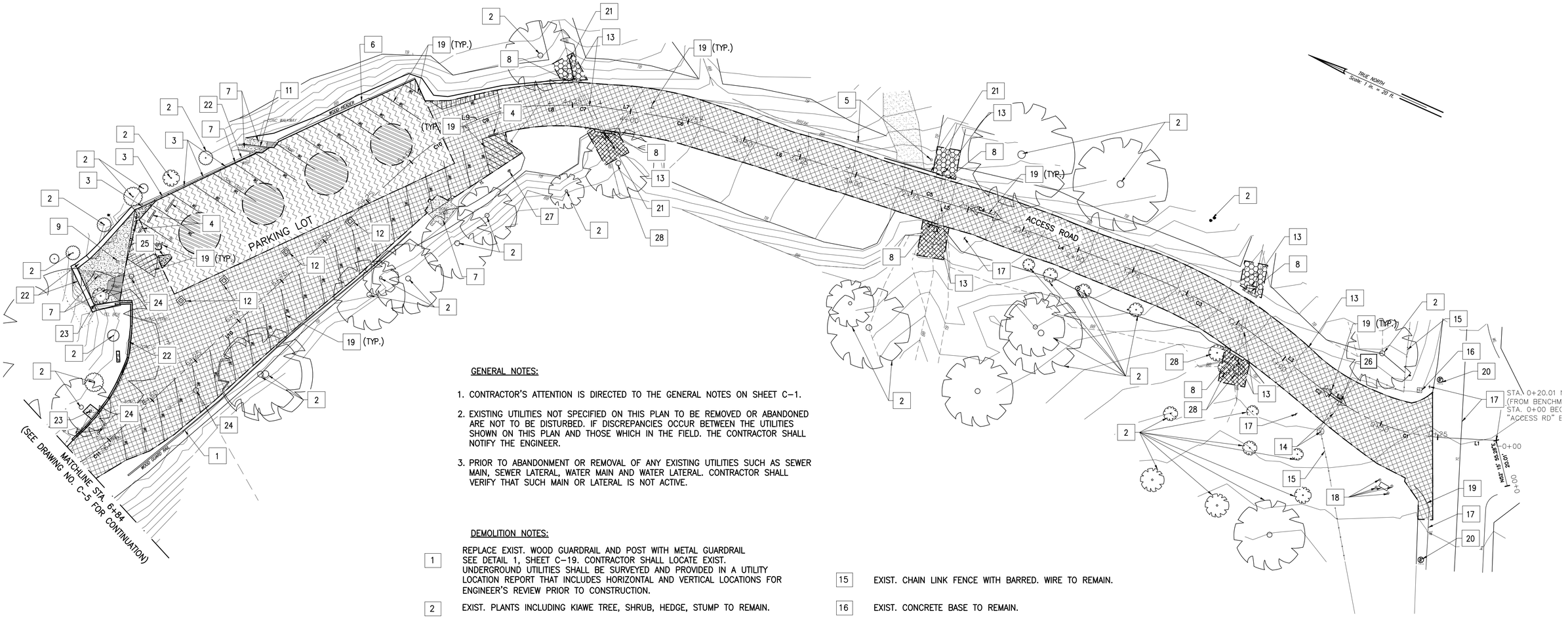

GENERAL NOTES:

1. CONTRACTOR'S ATTENTION IS DIRECTED TO THE GENERAL NOTES ON SHEET C–1.
2. EXISTING UTILITIES NOT SPECIFIED ON THIS PLAN TO BE REMOVED OR ABANDONED ARE NOT TO BE DISTURBED. IF DISCREPANCIES OCCUR BETWEEN THE UTILITIES SHOWN ON THIS PLAN AND THOSE WHICH IN THE FIELD. THE CONTRACTOR SHALL NOTIFY THE ENGINEER.
3. PRIOR TO ABANDONMENT OR REMOVAL OF ANY EXISTING UTILITIES SUCH AS SEWER MAIN, SEWER LATERAL, WATER MAIN AND WATER LATERAL. CONTRACTOR SHALL VERIFY THAT SUCH MAIN OR LATERAL IS NOT ACTIVE.

DEMOLITION NOTES:

1. REPLACE EXIST. WOOD GUARDRAIL AND POST WITH METAL GUARDRAIL SEE DETAIL 1, SHEET C–19. CONTRACTOR SHALL LOCATE EXIST. UNDERGROUND UTILITIES SHALL BE SURVEYED AND PROVIDED IN A UTILITY LOCATION REPORT THAT INCLUDES HORIZONTAL AND VERTICAL LOCATIONS FOR ENGINEER'S REVIEW PRIOR TO CONSTRUCTION.
2. EXIST. PLANTS INCLUDING KIAWE TREE, SHRUB, HEDGE, STUMP TO REMAIN.
3. EXIST. WALL MOUNTED "VISITOR PARKING", "EMPLOYEE OF THE QUARTER" OR "DIRECTOR OF CIVIL DEFENSE" SIGN TO BE REMOVED.
4. EXIST. WHEEL STOP TO BE REMOVED.
5. EXIST. ACCESS CHAIN BARRIER TO BE REPLACED NEW ACCESS CHAIN BARRIER WITH LOCK. SEE DETAIL 1, SHEET C–14.
6. WOOD HEADERS AND ALL ANCHORING TO BE REMOVED. CLEAR VEGETATION AND DEBRIS ALONG THE HEADER AREA. REGRADE EXISTING GROUND AND CONSTRUCT 3–FOOT WIDE SWALE SLOPED BETWEEN 2% AND 5% SLOPE. REGRADED GROUND SHALL BACKFILL AND COMPACT TO 95% R.C.
7. EXIST. CONCRETE CURB, STRIP, WALKWAY, ADA RAMP, PAD OR STAIR TO REMAIN.
8. EXIST. DRAINAGE CULVERT, SWALE, HEADWALL AND BASE OR INLET/OUTLET PIPE TO REMAIN.
9. EXIST. FLAG POLE AND FOUNDATION TO REMAIN.
10. EXIST. AC PAVEMENT OR BERM TO REMAIN.
11. EXIST. GUARDRAIL OR HANDRAIL TO REMAIN.
12. METAL GRATE AND CONCRETE UTILITY BOX WALLS 8" FROM TOP OF BOX TO BE REMOVED. BACKFILL AND COMPACT SUBGRADE TO 95% R.C.
13. CLEAR DEBRIS AND SEDIMENT IN EXIST. DRAINAGE PIPE AND CULVERT AND ADJOINING SWALES.
14. EXIST. GATE AND FOUNDATION TO REMAIN.
15. EXIST. CHAIN LINK FENCE WITH BARRED. WIRE TO REMAIN.
16. EXIST. CONCRETE BASE TO REMAIN.
17. EXIST. SIGN AND POST OR PAVEMENT STRIPING TO REMAIN.
18. EXIST. UTILITY BOX AND BOLLARD POSTS TO REMAIN.
19. REPLACE ALL PAVEMENT STRIPING OR MARKING WITHIN PAVEMENT RESURFACING LIMIT. SEE SIGNING AND STRIPING PLAN.
20. EXIST. "NO PEDESTRIAN TRAFFIC" PAVEMENT MARKING TO BE REPAINTED IN–KIND.
21. EXIST. PVC OR METAL CONDUIT TO BE REMOVED.
22. EXIST. CONCRETE, CMU OR ROCK WALL TO REMAIN.
23. EXIST. UTILTY OVERHEAD POWER LINE, CONDUIT, POLE, GUY WIRE ANCHOR, PULL BOX, MANHOLE FRAME AND COVER OR FIRE HYDRANT TO REMAIN.
24. EXIST. UTILITY PULL BOX OR MANHOLE FRAME AND COVER TO BE ADJUSTED TO FINISHED GRADE.
25. EXIST. CONCRETE PAVEMENT TO BE PAVED WITH AC PAVEMENT.
26. EXIST. GATE POST SLEEVE AND BASE TO BE REINSTALLED AND ADJUSTED TO FINISHED GRADE.
27. EXIST. SIGN AND POST TO BE REMOVED AND RELOCATED. SEE SIGNING & STRIPING PLANS C–10 AND C–11.
28. EXIST. TREE(S) TO BE REMOVED.

LEGEND:

- 5 — DEMOLITION NOTE
- PAVEMENT RESURFACING LIMIT
- 2" TO 3" EXISTING AC PAVEMENT TO BE REMOVED TO EXPOSE TOP OF EXIST. CONCRETE SLAB. THE CONCRETE SLAB SHALL BE PAVED WITH 2" TO 3" AC PAVEMENT.
- 8" EXISTING AC PAVEMENT AND BASE TO BE REMOVED. BACKFILL AND COMPACT SUBGRADE TO 95% R.C.
- 3'–4" EXIST. GROUND TO BE REMOVED FOR CONSTRUCTION OF RIPRAP APRON. BACKFILL AND COMPACT SUBGRADE TO 95% R.C. (CONTRACTOR SHALL POTHOLE UNDERGROUND UTILITIES PRIOR TO INSTALLATION.)
- EXIST. GROUND TO BE REGRADED FOR INSTALLATION OF DRAINAGE TRENCH AND EROSION CONTROL MATTING; REGRADED GROUND SHALL BE 1:1 SLOPE; BACKFILL AND COMPACT REGRADED GROUND TO 95% R.C.
- EXCAVATE 2 FEET DOWN FROM EXISTING SURFACE WITHIN GUN TURRENT AREA AND RECOMPACT SUBGRADE TO 95% R.C.
- BASE LINE

ABBREVIATIONS:

AC	ASPHALTIC CONCRETE
CMU	CONCRETE MASONRY UNIT
H	HORIZONTAL
R.C.	RELATIVE COMPACTION
V	VERTICAL

REVISION NO.	SYM.	DESCRIPTION	SHT OF	DATE	APPROVED:

PERICLES M. MANTHOS
LICENSED PROFESSIONAL ENGINEER
No. 7833–C
HAWAII, U.S.A.

License Expiration Date 04–30–18

THIS WORK WAS PREPARED BY ME OR UNDER MY SUPERVISION AND CONSTRUCTION OF THIS PROJECT WILL BE UNDER MY OBSERVATION AS DEFINED IN HAR TITLE 16, CHAPTER 115, RULES OF THE BOARD OF PROFESSIONAL ENGINEERS, ARCHITECTS AND SURVEYORS, STATE OF HAWAII

Signature — Date 01–23–18

DEPARTMENT OF DEFENSE
STATE OF HAWAII

REPAIR AND RESURFACE ACCESS ROAD AND PARKING LOT, BIRKHIMER EOC
HONOLULU, OAHU, HAWAII

DEMOLITION AND PAVEMENT EXCAVATION PLAN

MANTHOS ENGINEERING, LLC

DESIGNED BY: KM	CHECKED BY: MO	JOB NO. CA–1325–C	DRAWING NO. C-4
DRAWN BY: KM	APPROVED BY: PM	DATE JAN, 2018	SHEET 6 OF 28 SHEETS
SCALE: 1" = 20'			

\\MF-FILESVR\Company\Projects - Civil Design\DOD Birkhimer Parking Lot and Access Road\Additional Work\L0090\L_Submittal\SHT 06-07_Birkhimer5-DEMO-R1.dwg, 1/23/2018 11:24:32 AM, DWG To PDF.pc3

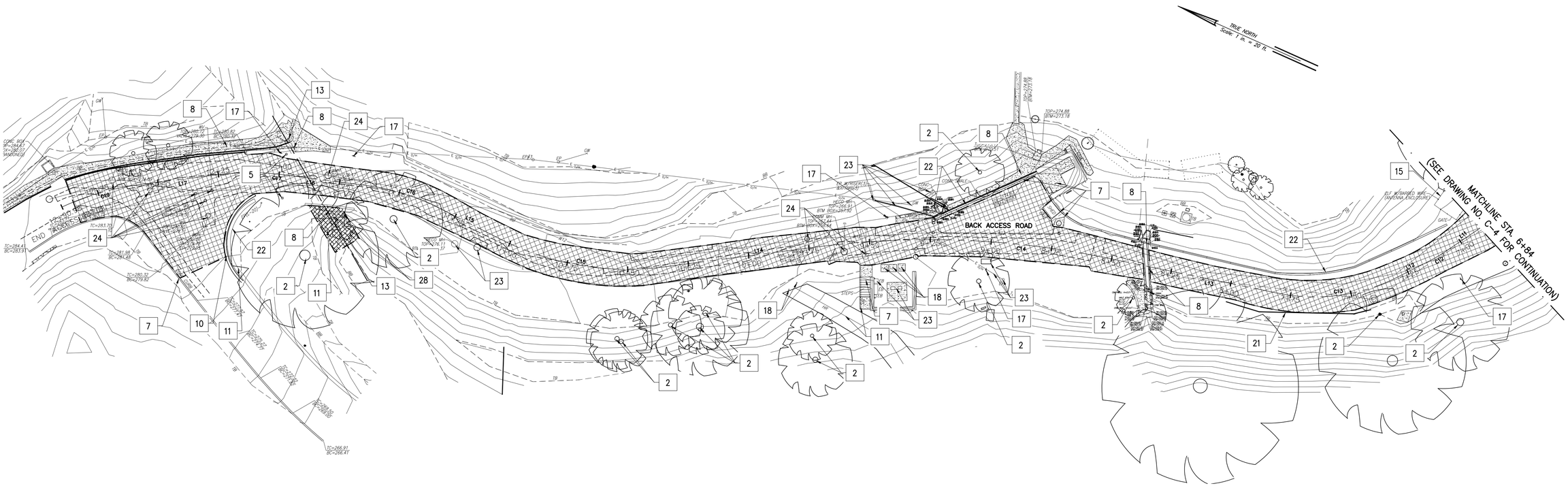

GENERAL NOTES:

1. CONTRACTOR'S ATTENTION IS DIRECTED TO THE GENERAL NOTES ON SHEET C–1.
2. EXISTING UTILITIES NOT SPECIFIED ON THIS PLAN TO BE REMOVED OR ABANDONED ARE NOT TO BE DISTURBED. IF DISCREPANCIES OCCUR BETWEEN THE UTILITIES SHOWN ON THIS PLAN AND THOSE WHICH IN THE FIELD. THE CONTRACTOR SHALL NOTIFY THE ENGINEER.
3. PRIOR TO ABANDONMENT OR REMOVAL OF ANY EXISTING UTILITIES SUCH AS SEWER MAIN, SEWER LATERAL, WATER MAIN AND WATER LATERAL. CONTRACTOR SHALL VERIFY THAT SUCH MAIN OR LATERAL IS NOT ACTIVE.

LEGEND:

5	DEMOLITION NOTE
— — —	PAVEMENT RESURFACING LIMIT
	2" TO 3" EXISTING AC PAVEMENT TO BE REMOVED TO EXPOSE TOP OF EXIST. CONCRETE SLAB. THE CONCRETE SLAB SHALL BE PAVED WITH 2" TO 3" AC PAVEMENT.
	8" EXISTING AC PAVEMENT AND BASE TO BE REMOVED. BACKFILL AND COMPACT SUBGRADE TO 95% R.C.
	3'–4" EXIST. GROUND TO BE REMOVED FOR CONSTRUCTION OF RIPRAP APRON. BACKFILL AND COMPACT SUBGRADE TO 95% R.C. (CONTRACTOR SHALL POTHOLE UNDERGROUND UTILITIES PRIOR TO INSTALLATION.)
	EXIST. GROUND TO BE REGRADED FOR INSTALLATION OF DRAINAGE TRENCH AND EROSION CONTROL MATTING; REGRADED GROUND SHALL BE 1:1 SLOPE; BACKFILL AND COMPACT REGRADED GROUND TO 95% R.C.
	EXCAVATE 2 FEET DOWN FROM EXISTING SURFACE WITHIN GUN TURRENT AREA AND RECOMPACT SUBGRADE TO 95% R.C.
— — —	BASE LINE

DEMOLITION NOTES:

1	REPLACE EXIST. WOOD GUARDRAIL AND POST WITH METAL GUARDRAIL SEE DETAIL 1, SHEET C–19. CONTRACTOR SHALL LOCATE EXIST. UNDERGROUND UTILITIES SHALL BE SURVEYED AND PROVIDED IN A UTILITY LOCATION REPORT THAT INCLUDES HORIZONTAL AND VERTICAL LOCATIONS FOR ENGINEER'S REVIEW PRIOR TO CONSTRUCTION.
2	EXIST. PLANTS INCLUDING KIAWE TREE, SHRUB, HEDGE, STUMP TO REMAIN.
3	EXIST. WALL MOUNTED "VISITOR PARKING", "EMPLOYEE OF THE QUARTER" OR "DIRECTOR OF CIVIL DEFENSE" SIGN TO BE REMOVED.
4	EXIST. WHEEL STOP TO BE REMOVED.
5	EXIST. ACCESS CHAIN BARRIER TO BE REPLACED NEW ACCESS CHAIN BARRIER WITH LOCK. SEE DETAIL 1, SHEET C–14.
6	WOOD HEADERS AND ALL ANCHORING TO BE REMOVED. CLEAR VEGETATION AND DEBRIS ALONG THE HEADER AREA. REGRADE EXISTING GROUND AND CONSTRUCT 3–FOOT WIDE SWALE SLOPED BETWEEN 2% AND 5% SLOPE. REGRADED GROUND SHALL BACKFILL AND COMPACT TO 95% R.C.
7	EXIST. CONCRETE CURB, STRIP, WALKWAY, ADA RAMP, PAD OR STAIR TO REMAIN.
8	EXIST. DRAINAGE CULVERT, SWALE, HEADWALL AND BASE OR INLET/OUTLET PIPE TO REMAIN.
9	EXIST. FLAG POLE AND FOUNDATION TO REMAIN.
10	EXIST. AC PAVEMENT OR BERM TO REMAIN.
11	EXIST. GUARDRAIL OR HANDRAIL TO REMAIN.
12	METAL GRATE AND CONCRETE UTILITY BOX WALLS 8" FROM TOP OF BOX TO BE REMOVED. BACKFILL AND COMPACT SUBGRADE TO 95% R.C.
13	CLEAR DEBRIS AND SEDIMENT IN EXIST. DRAINAGE PIPE AND CULVERT AND ADJOINING SWALES.
14	EXIST. GATE AND FOUNDATION TO REMAIN.
15	EXIST. CHAIN LINK FENCE WITH BARRED. WIRE TO REMAIN.
16	EXIST. CONCRETE BASE TO REMAIN.
17	EXIST. SIGN AND POST OR PAVEMENT STRIPING TO REMAIN.
18	EXIST. UTILITY BOX AND BOLLARD POSTS TO REMAIN.
19	REPLACE ALL PAVEMENT STRIPING OR MARKING WITHIN PAVEMENT RESURFACING LIMIT. SEE SIGNING AND STRIPING PLAN.
20	EXIST. "NO PEDESTRIAN TRAFFIC" PAVEMENT MARKING TO BE REPAINTED IN–KIND.
21	EXIST. PVC OR METAL CONDUIT TO BE REMOVED.
22	EXIST. CONCRETE, CMU OR ROCK WALL TO REMAIN.
23	EXIST. UTILTY OVERHEAD POWER LINE, FIRE HYDRANT, CONDUIT, POLE, GUY WIRE ANCHOR, PULL BOX, MANHOLE FRAME AND COVER TO REMAIN.
24	EXIST. UTILITY PULL BOX OR MANHOLE FRAME AND COVER TO BE ADJUSTED TO FINISHED GRADE.
25	EXIST. CONCRETE PAVEMENT TO BE PAVED WITH AC PAVEMENT.
26	EXIST. GATE POST SLEEVE AND BASE TO BE REINSTALLED AND ADJUSTED TO FINISHED GRADE.
27	EXIST. SIGN AND POST TO BE REMOVED AND RELOCATED. SEE SIGNING & STRIPING PLANS C–10 AND C–11.
28	EXIST. TREE(S) TO BE REMOVED.

ABBREVIATIONS:

AC	ASPHALTIC CONCRETE
CMU	CONCRETE MASONRY UNIT
H	HORIZONTAL
R.C.	RELATIVE COMPACTION
V	VERTICAL

REVISION NO.	SYM.	DESCRIPTION	SHT OF	DATE	APPROVED:

PERICLES M. MANTHOS
LICENSED PROFESSIONAL ENGINEER
No. 7833–C
HAWAII, U.S.A.

License Expiration Date 04–30–18

THIS WORK WAS PREPARED BY ME OR UNDER MY SUPERVISION AND CONSTRUCTION OF THIS PROJECT WILL BE UNDER MY OBSERVATION AS DEFINED IN HAR TITLE 16, CHAPTER 115, RULES OF THE BOARD OF PROFESSIONAL ENGINEERS, ARCHITECTS AND SURVEYORS, STATE OF HAWAII

Signature 01–23–18 Date

DEPARTMENT OF DEFENSE
STATE OF HAWAII

REPAIR AND RESURFACE ACCESS ROAD AND PARKING LOT, BIRKHIMER EOC
HONOLULU, OAHU, HAWAII

DEMOLITION AND PAVEMENT EXCAVATION PLAN

MANTHOS ENGINEERING, LLC		JOB NO.	DRAWING NO.
DESIGNED BY: KM	CHECKED BY: MO	CA–1325–C	C-5
DRAWN BY: KM	APPROVED BY: PM	DATE JAN, 2018	SHEET 7 OF 28 SHEETS
SCALE:			

\\ME-FILES\RC\Company\Projects - Civil Design\DOD Birkhimer Parking Lot and Access Road\Additional Work\100%RL\Submittal\SHT 06-07_Birkhimer5-DEMO-R1.dwg, 1/23/2018 11:24:53 AM, DWG To PDF.pc3

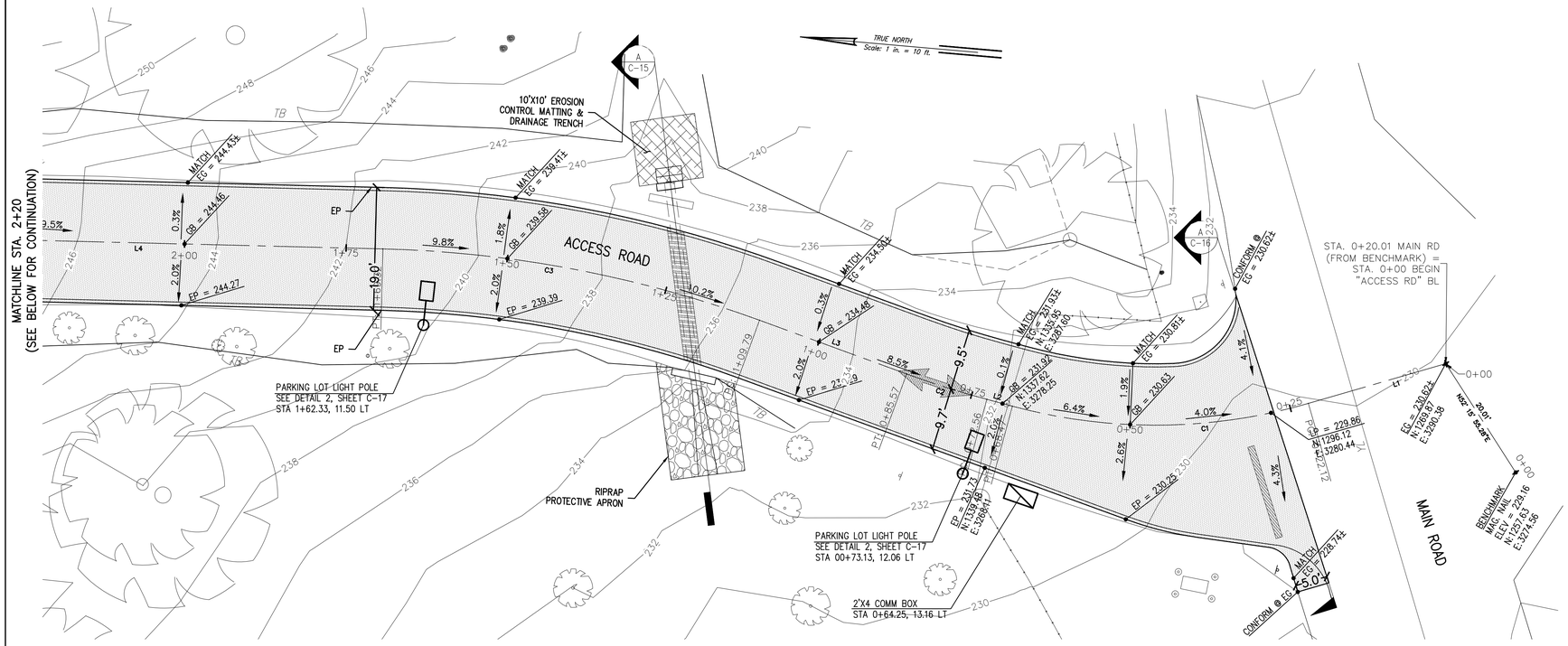

ACCESS ROAD PAVEMENT AND GRADING PLAN

SCALE: 1" = 10'

ABBREVIATIONS:

AC	APHALTIC CONCRETE
BL	BASE LINE
E	EASTING
EG	EXISTING GRADE
EP	EDGE OF PAVEMENT
FDAC	FULL DEPTH ASPHALTIC CONCRETE
FG	FINISHED GRADE
GB	GRADE BREAK
LP	LOW POINT
N	NORTHING

LEGEND:

8 INCH DEEP X 4 FEET WIDE (MIN.) FDAC OVER EXIST. STORM DRAINAGE PIPE.

2-INCH AC OVER 6-INCH BASE COURSE.

BASE LINE

GENERAL NOTES:

1. TYPES, DIMENSIONS AND LOCATIONS OF SIGNS, PAVEMENT MARKINGS AND STRIPING AS SHOWN ON PLAN. REFER TO STRIPING AND STRIPING PLANS, DRAWINGS C-10 AND C-11.

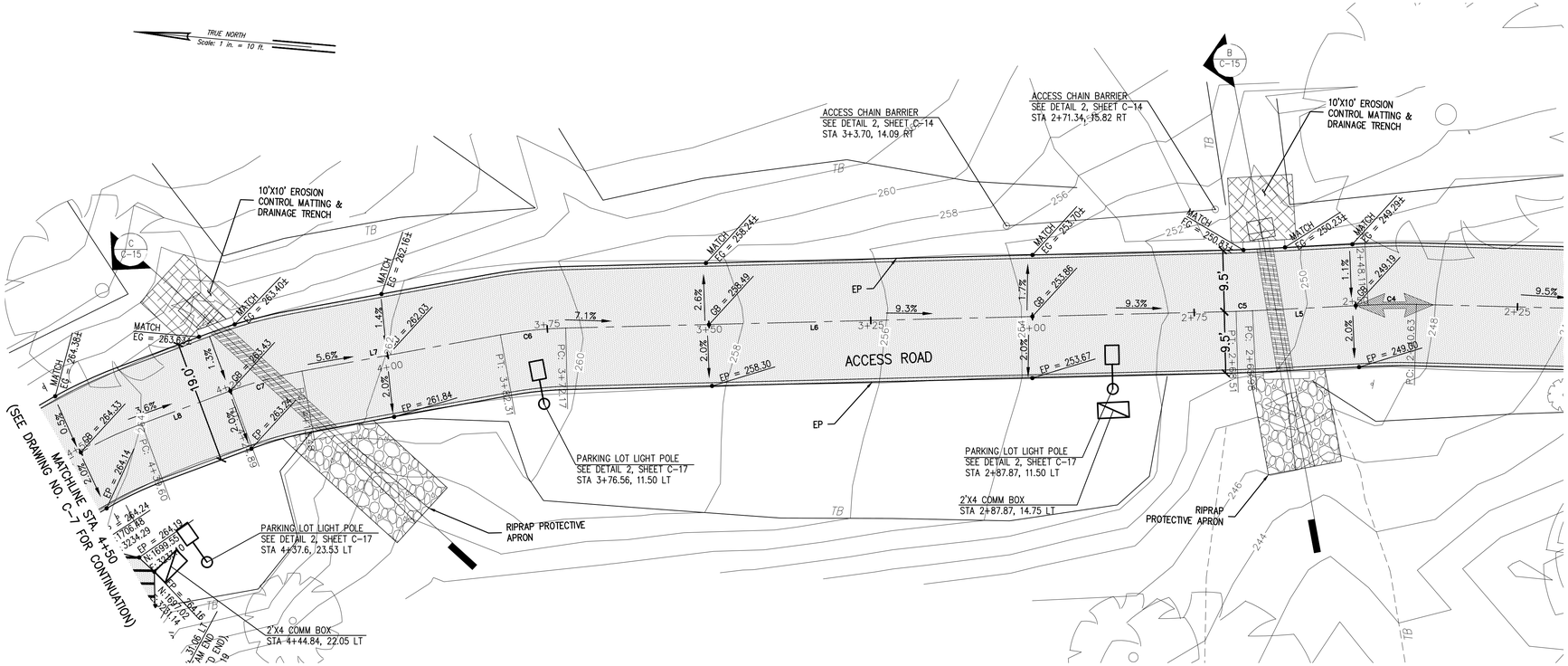

ACCESS ROAD PAVEMENT AND GRADING PLAN

SCALE: 1" = 10'

LINE TABLE		
Line #	Length	Direction
L1	22.12'	N21°09'47"W
L2	4.09'	S10°04'54"W
L3	24.22'	N15°03'12"E
L4	71.31'	N3°35'02"W
L5	17.87'	N7°52'12"W
L6	103.66'	N6°25'09"W
L7	31.18'	N15°21'20"W

CURVE TABLE					
Curve #	Δ	Radius	Tangent Distance	Length	Chord Direction
C1	31°14'41"	85.00'	23.77'	46.35'	N5° 32' 27"W
C2	4°58'18"	150.00'	6.51'	13.02'	N12° 34' 03"E
C3	18°38'14"	183.00'	30.03'	59.53'	N5° 44' 05"E
C4	4°17'09"	100.00'	3.74'	7.48'	N5° 43' 37"W
C5	1°27'02"	100.00'	1.27'	2.53'	N7° 08' 41"W
C6	8°56'11"	65.00'	5.08'	10.14'	N10° 53' 15"W
C7	10°03'14"	65.00'	5.72'	11.41'	N20° 22' 57"W

GRAPHIC SCALE

10' 0 10' 20'

SCALE: 1"=10'

REVISION NO.	SYM.	DESCRIPTION	SHT OF	DATE	APPROVED:

PERICLES M. MANTHOS
LICENSED PROFESSIONAL ENGINEER
No. 7833-C
HAWAII, U.S.A.

License Expiration Date 04-30-18

THIS WORK WAS PREPARED BY ME OR UNDER MY SUPERVISION AND CONSTRUCTION OF THIS PROJECT WILL BE UNDER MY OBSERVATION AS DEFINED IN HAR TITLE 16, CHAPTER 115, RULES OF THE BOARD OF PROFESSIONAL ENGINEERS, ARCHITECTS AND SURVEYORS, STATE OF HAWAII

Signature 01-23-18 Date

DEPARTMENT OF DEFENSE
STATE OF HAWAII

REPAIR AND RESURFACE ACCESS ROAD AND PARKING LOT, BIRKHIMER EOC
HONOLULU, OAHU, HAWAII

PAVEMENTAND GRADING PLAN
(STA. 0+00 TO 4+50)

MANTHOS ENGINEERING, LLC

DESIGNED BY: KM	CHECKED BY: MO	JOB NO. CA-1325-C	DRAWING NO. C-6
DRAWN BY: KM	APPROVED BY: PM	DATE JAN, 2018	SHEET 8 OF 28 SHEETS
SCALE:			

\\ME-FILESVR\Company\Projects - Civil Design\DOD Birkhimer Parking Lot and Access Road\Additional Work\L0090\3_Submittal\SHT 08-10_Birkhimer5-GD PLAN-RL.dwg, 1/23/2018 11:26:25 AM, DWG To PDF.pc3

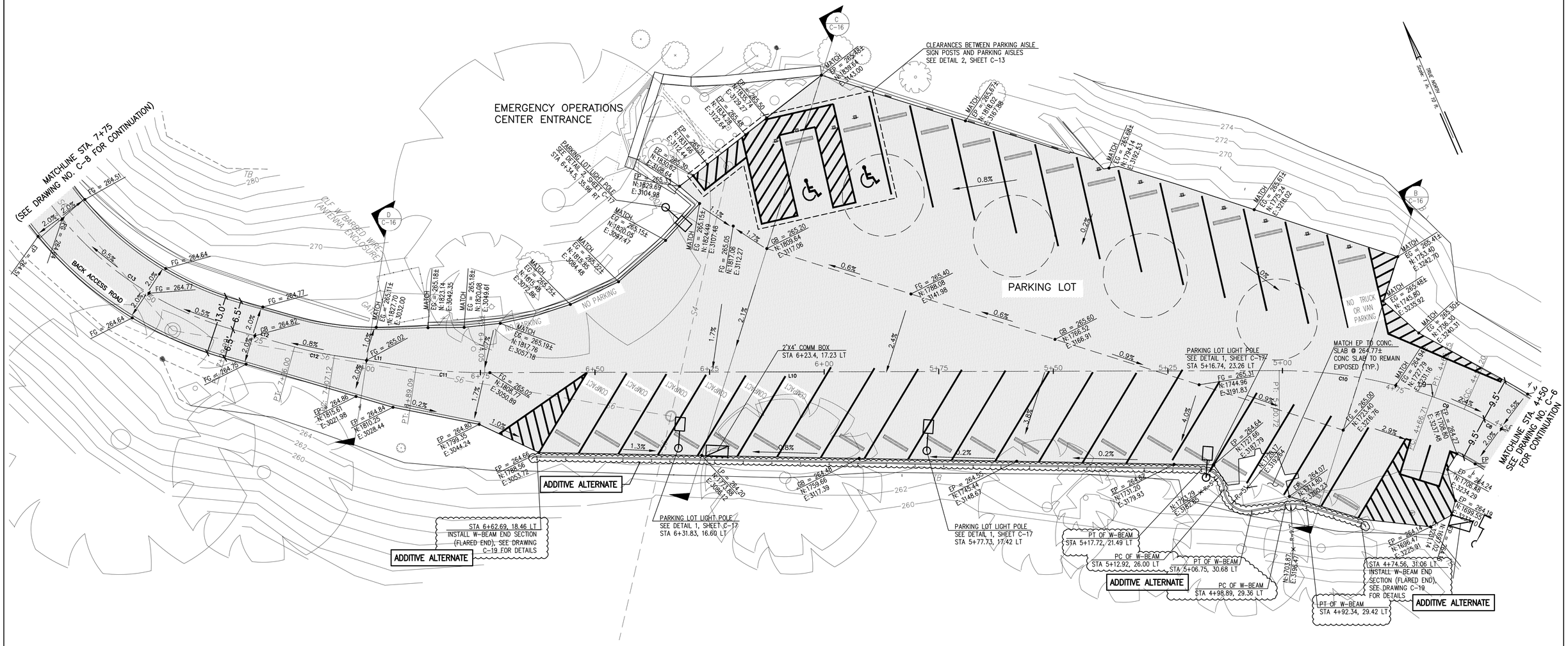

PARKING LOT PAVEMENT AND GRADING PLAN

SCALE: 1" = 10'

ABBREVIATIONS:

AC	APHALTIC CONCRETE
BL	BASE LINE
E	EASTING
EG	EXISTING GRADE
EP	EDGE OF PAVEMENT
FDAC	FULL DEPTH ASPHALTIC CONCRETE
FG	FINISHED GRADE
GB	GRADE BREAK
LP	LOW POINT
N	NORTHING

LEGEND:

8 INCH DEEP X 4 FEET WIDE (MIN.) FDAC OVER EXIST. STORM DRAINAGE PIPE.

2-INCH AC OVER 6-INCH BASE COURSE.

BASE LINE

GRAPHIC SCALE

10' 0 10' 20'

SCALE: 1"=10'

GUARDRAIL NOTES:

1. CONTRACTOR TO CONFIRM LOCATION OF UNDERGROUND PRIOR TO INSTALLATION OF GUARDRAIL.
2. THE REMOVAL AND DISPOSAL OF EXISTING RAILINGS, POSTS, AND LANDSCAPING WITHIN THE WORK AREA SHALL BE CONSIDERED INCIDENTAL TO VARIOUS CONTRACT ITEMS.
3. GUARDRAIL POST EXCAVATION AND MISCELLANEOUS APPURTENANCES NECESSARY TO ANCHOR THE GUARDRAIL ENDS SHALL BE INCIDENTAL TO METAL GUARDRAIL.
4. TYPES, DIMENSIONS AND LOCATIONS OF SIGNS, PAVEMENT MARKINGS AND STRIPING AS SHOWN ON PLAN. REFER TO STRIPING AND STRIPING PLANS, DRAWING NO. C-10 AND C-11.

LINE TABLE

Line #	Length	Direction
L8	14.71'	N25°24'34"W
L9	0.46'	N47°16'54"W
L10	173.33'	N66°45'57"W
L11	18.02'	N58°08'51"W
L12	13.98'	N50°52'23"W

CURVE TABLE

Curve #	Δ	Radius	Tangent Distance	Length	Chord Direction
C8	17°16'37"	65.00'	9.88'	19.60'	N34° 02' 53"W
C9	4°35'42"	88.00'	3.53'	7.06'	N44° 59' 03"W
C10	19°29'03"	100.00'	17.17'	34.01'	N57° 01' 25"W
C11	8°37'06"	100.00'	7.54'	15.04'	N62° 27' 24"W
C12	7°16'28"	70.00'	4.45'	8.89'	N54° 30' 37"W
C13	38°23'26"	75.00'	26.11'	50.25'	N31° 40' 39"W

REVISION NO.	SYM.	DESCRIPTION	SHT OF	DATE	APPROVED:

PERICLES M. MANTHOS
LICENSED PROFESSIONAL ENGINEER
No. 7833-C
HAWAII, U.S.A.

License Expiration Date 04-30-18

THIS WORK WAS PREPARED BY ME OR UNDER MY SUPERVISION AND CONSTRUCTION OF THIS PROJECT WILL BE UNDER MY OBSERVATION AS DEFINED IN HAR TITLE 16, CHAPTER 115, RULES OF THE BOARD OF PROFESSIONAL ENGINEERS, ARCHITECTS AND SURVEYORS, STATE OF HAWAII

Signature 01-23-18 Date

DEPARTMENT OF DEFENSE
STATE OF HAWAII

REPAIR AND RESURFACE ACCESS ROAD AND PARKING LOT, BIRKHIMER EOC
HONOLULU, OAHU, HAWAII

PAVEMENT AND GRADING PLAN
(STA. 4+50 TO 7+75)

MANTHOS ENGINEERING, LLC

DESIGNED BY: KM	CHECKED BY: MO	JOB NO. CA-1325-C	DRAWING NO. C-7
DRAWN BY: KM	APPROVED BY: PM	DATE JAN, 2018	SHEET 9 OF 28 SHEETS
SCALE:			

\\ME-FILES\RC\Company\Projects - Civil Design\DOD Birkhimer Parking Lot and Access Road\Additional Work\L0094\1_Submittals\SHT 08-10_Birkhimer5-GD PLAN-R1.dwg, 1/23/2018 11:26:58 AM, DWG To PDF.pc3

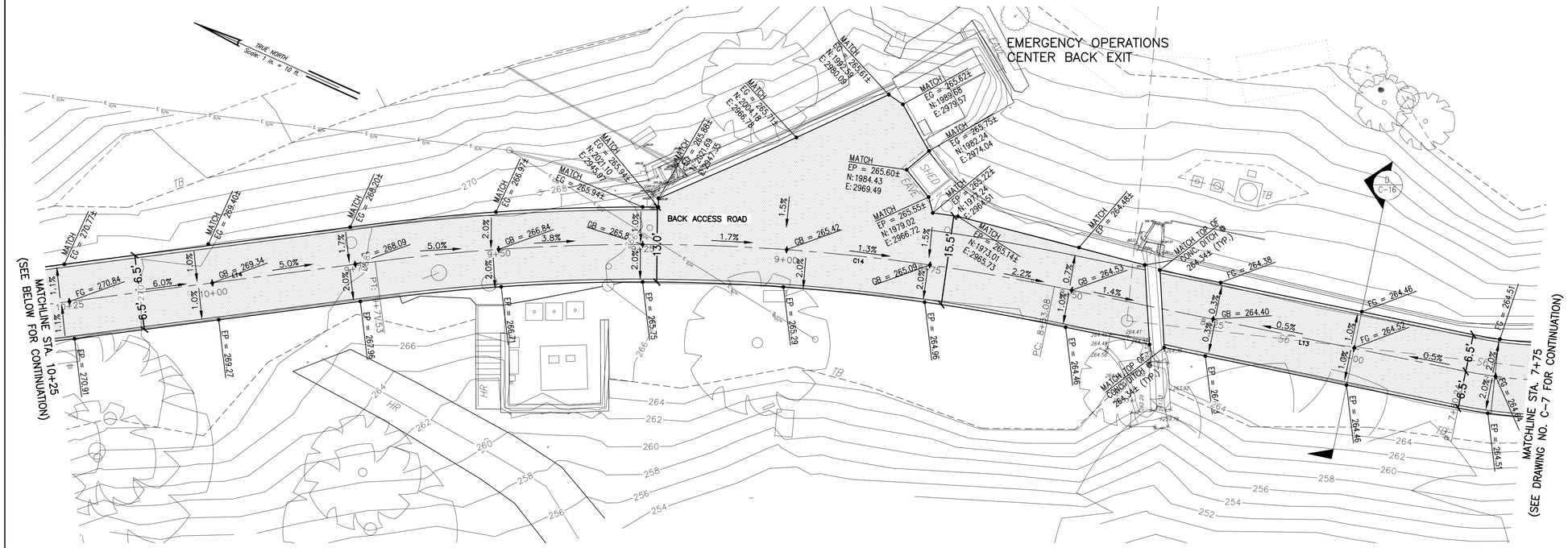

BACK ACCESS ROAD PAVEMENT AND GRADING PLAN

SCALE: 1" = 10'

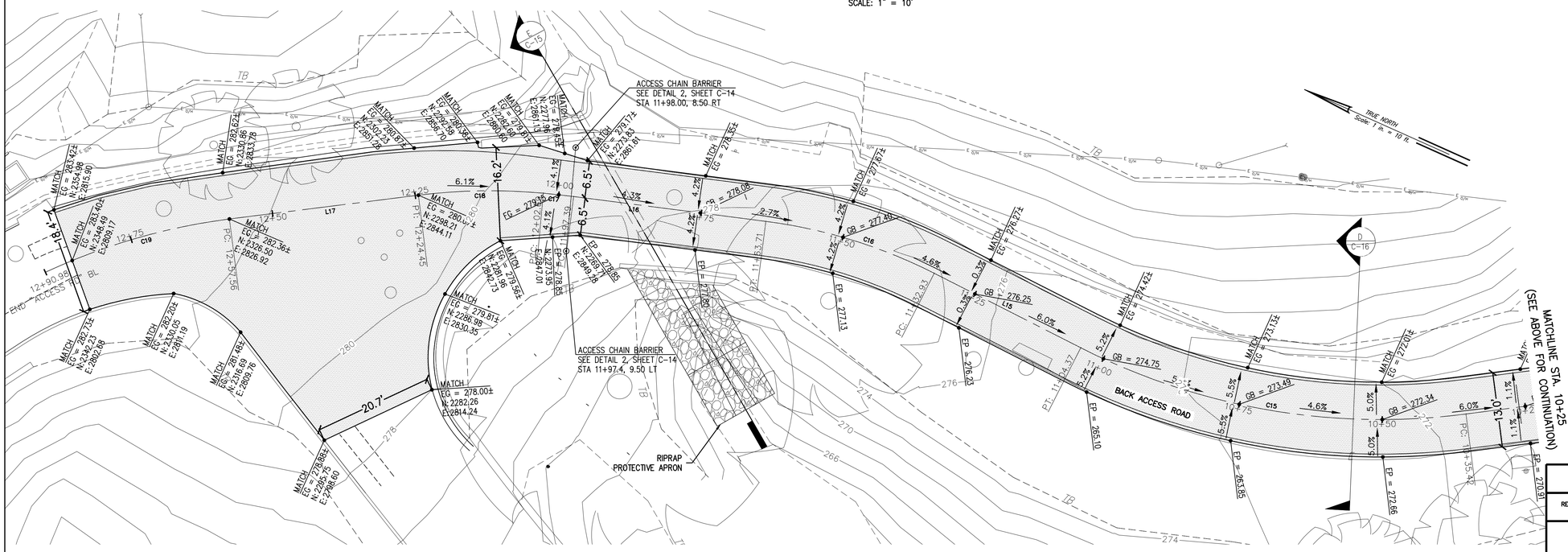

BACK ACCESS ROAD PAVEMENT AND GRADING PLAN

SCALE: 1" = 10'

ABBREVIATIONS:

AC	APHALTIC CONCRETE
BL	BASE LINE
E	EASTING
EG	EXISTING GRADE
EP	EDGE OF PAVEMENT
FDAC	FULL DEPTH ASPHALTIC CONCRETE
FG	FINISHED GRADE
GB	GRADE BREAK
LP	LOW POINT
N	NORTHING

LEGEND:

- 8 INCH DEEP X 4 FEET WIDE (MIN.) FDAC OVER EXIST. STORM DRAINAGE PIPE.
- 2-INCH AC OVER 6-INCH BASE COURSE.
- BASE LINE.

GENERAL NOTES:

1. TYPES, DIMENSIONS AND LOCATIONS OF SIGNS, PAVEMENT MARKINGS AND STRIPING AS SHOWN ON PLAN. REFER TO STRIPING AND STRIPING PLANS, DRAWINGS C-10 AND C-11.

LINE TABLE

Line #	Length	Direction
L13	72.84'	N12°28'56"W
L14	63.89'	N31°32'44"W
L15	28.56'	N2°48'33"E
L16	33.68'	N16°47'04"W
L17	33.11'	N31°16'41"W

CURVE TABLE

Curve #	Δ	Radius	Tangent Distance	Length	Chord Direction
C14	19°03'48"	356.00'	59.78'	118.45'	N22° 00' 50"W
C15	34°21'17"	115.00'	35.55'	68.95'	N14° 22' 06"W
C16	19°35'37"	90.00'	15.54'	30.78'	N6° 59' 15"W
C17	2°01'26"	150.00'	2.65'	5.30'	N17° 47' 47"W
C18	12°28'11"	100.00'	10.93'	21.76'	N25° 02' 36"W
C19	17°34'09"	109.00'	16.84'	33.42'	N40° 15' 00"W

GRAPHIC SCALE

10' 0 10' 20'

SCALE: 1"=10'

REVISION NO.	SYM.	DESCRIPTION	SHT OF	DATE	APPROVED:

PERICLES M. MANTHOS
LICENSED PROFESSIONAL ENGINEER
No. 7833-C
HAWAII, U.S.A.

License Expiration Date 04-30-18

THIS WORK WAS PREPARED BY ME OR UNDER MY SUPERVISION AND CONSTRUCTION OF THIS PROJECT WILL BE UNDER MY OBSERVATION AS DEFINED IN HAR TITLE 16, CHAPTER 115, RULES OF THE BOARD OF PROFESSIONAL ENGINEERS, ARCHITECTS AND SURVEYORS, STATE OF HAWAII

Signature 01-23-18 Date

DEPARTMENT OF DEFENSE
STATE OF HAWAII

REPAIR AND RESURFACE ACCESS ROAD AND PARKING LOT, BIRKHIMER EOC
HONOLULU, OAHU, HAWAII

PAVEMENT AND GRADING PLAN
(STA. 7+75 TO 12+90.98)

MANTHOS ENGINEERING, LLC		JOB NO.	DRAWING NO.
DESIGNED BY: KM	CHECKED BY: MO	CA-1325-C	C-8
DRAWN BY: KM	APPROVED BY: PM	DATE JAN, 2018	SHEET 10 OF 28 SHEETS
SCALE:			

\\ME-FILES\RC\Company\Projects - Civil Design\DOD Birkhimer Parking Lot and Access Road\Additional Work\L0016-EL Submittal\SHT 08-10_Birkhimer's-GD PLAN-RL.dwg, 1/23/2018 11:27:27 AM, DWG To PDF.pc3

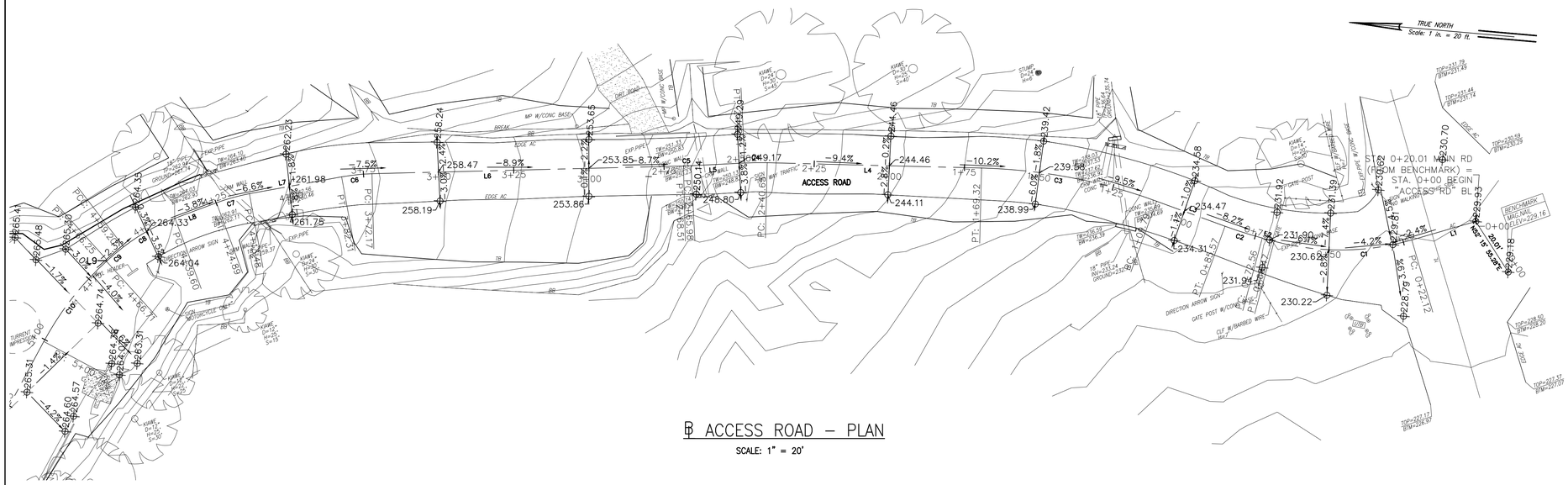

℄ ACCESS ROAD – PLAN

SCALE: 1" = 20'

LINE TABLE		
Line #	Length	Direction
L1	22.12'	N21°09'47"W
L2	4.09'	S10°04'54"W
L3	24.22'	N15°03'12"E
L4	71.31'	N3°35'02"W
L5	17.87'	N7°52'12"W
L6	103.66'	N6°25'09"W
L7	31.18'	N15°21'20"W
L8	14.71'	N25°24'34"W
L9	0.46'	N47°16'54"W

CURVE TABLE					
Curve #	Δ	Radius	Tangent Distance	Length	Chord Direction
C1	31°14'41"	85.00'	23.77'	46.35'	N5° 32' 27"W
C2	4°58'18"	150.00'	6.51'	13.02'	N12° 34' 03"E
C3	18°38'14"	183.00'	30.03'	59.53'	N5° 44' 05"E
C4	4°17'09"	100.00'	3.74'	7.48'	N5° 43' 37"W
C5	1°27'02"	100.00'	1.27'	2.53'	N7° 08' 41"W
C6	8°56'11"	65.00'	5.08'	10.14'	N10° 53' 15"W
C7	10°03'14"	65.00'	5.72'	11.41'	N20° 22' 57"W
C8	17°16'37"	65.00'	9.88'	19.60'	N34° 02' 53"W
C9	4°35'42"	88.00'	3.53'	7.06'	N44° 59' 03"W
C10	19°29'03"	100.00'	17.17'	34.01'	N57° 01' 25"W

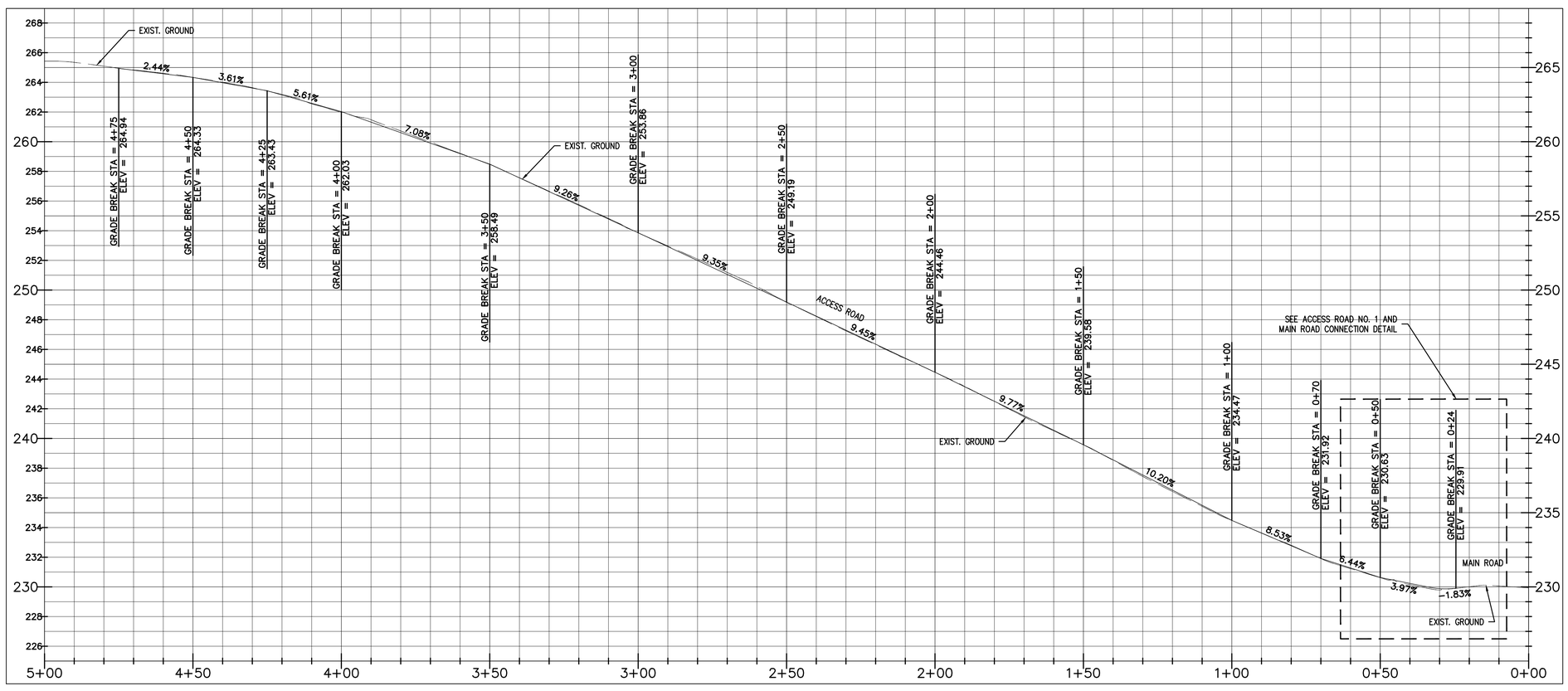

℄ ACCESS ROAD – PROFILE

SCALE: HORIZONTAL 1" = 20'
VERTICAL 1" = 4'

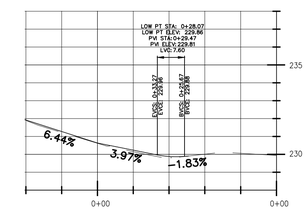

ACCESS ROAD AND MAIN ROAD CONNECTION DETAIL

SCALE: HORIZONTAL 1" = 10'
VERTICAL 1" = 2'

REVISION NO.	SYM.	DESCRIPTION	SHT OF	DATE	APPROVED:

PERICLES M. MANTHOS
LICENSED PROFESSIONAL ENGINEER
No. 7833-C
HAWAII, U.S.A.

License Expiration Date 04-30-18

THIS WORK WAS PREPARED BY ME OR UNDER MY SUPERVISION AND CONSTRUCTION OF THIS PROJECT WILL BE UNDER MY OBSERVATION AS DEFINED IN HAR TITLE 16, CHAPTER 115, RULES OF THE BOARD OF PROFESSIONAL ENGINEERS, ARCHITECTS AND SURVEYORS, STATE OF HAWAII

Signature 01-23-18 Date

DEPARTMENT OF DEFENSE
STATE OF HAWAII

REPAIR AND RESURFACE ACCESS ROAD AND PARKING LOT,
BIRKHIMER EOC
HONOLULU, OAHU, HAWAII

ACCESS ROAD HORIZONTAL CONTROL PLAN AND PROFILE

MANTHOS ENGINEERING, LLC

DESIGNED BY: KM	CHECKED BY: MO	JOB NO. CA-1325-C	DRAWING NO. C-9
DRAWN BY: KM	APPROVED BY: PM	DATE JAN, 2018	SHEET 11 OF 28 SHEETS
SCALE:			

\\MF-FILESVR\Company\Projects - Civil Design\DOD Birkhimer Parking Lot and Access Road\Additional Work\109-R1_Birkhimer-5-HTL_PP-R1.dwg, 1/23/2018 11:29:40 AM, DWG To PDF.pc3

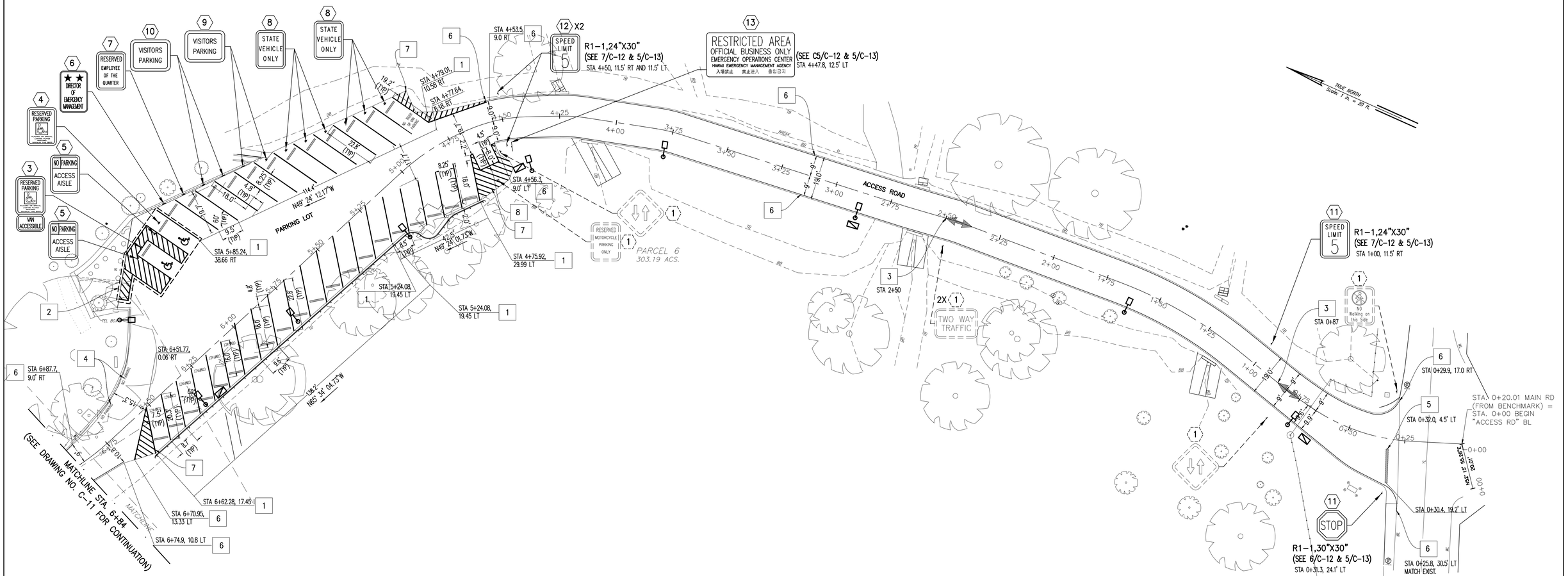

SIGNING LEGEND:

1. EXISTING SIGN AND POST(S) TO REMAIN
2. REMOVE EXISTING SIGN, REPLACE WITH NEW AND INSTALL NEW SIGN ON EXISTING POST.
3. INSTALL NEW RESERVED PARKING FOR VAN ACCESSIBLE PARKING SIGN AND POST. SEE DET(S). 1/C-12 & 6/C-13.
4. INSTALL NEW RESERVED ACCESSIBLE PARKING SIGN AND POST. SEE DET(S). 2/C-12 & 6/C-13.
5. INSTALL NEW ACCESS AISLE SIGN AND POST. SEE DET(S). 3/C-12 & 6/C-13.
6. INSTALL NEW DIRECTOR OF EMERGENCY MANAGEMENT SIGN ON EXIST. RETAINING WALL. SEE DET(S). C1/C-12 & 8/C-12.
7. INSTALL NEW RESERVED EMPLOYEE OF QUARTER SIGN ON EXIST. RETAINING WALL. SEE DET(S). C2/C-12 & X/C-13.
8. INSTALL NEW STATE VEHICLE ONLY SIGN AND POST SEE DET(S). C3/C-12 & 6/C-13.
9. INSTALL NEW VISITOR PARKING SIGN AND POST. SEE DET(S). C4/C-12 & 6/C-13.
10. INSTALL NEW VISITOR PARKING SIGN ON EXIST. RETAINING WALL. SEE DET(S). C4/C-12 & 8/C-12.
11. INSTALL NEW STOP SIGN AND POST. SEE DET(S). 6/C-12 & 5/C-13.
12. INSTALL NEW SPEED LIMIT 5 AND POST. SEE DET(S). 7/C-12 & 5/C-13.
13. INSTALL NEW RESTRICTED AREA SIGN AND POST. SEE DET(S). C5/C-12 & 5/C-13.

PAVEMENT MARKING LEGEND:

1. ANGLE PARKING STALL. SEE DET. 1/C-13.
2. ACCESSIBLE PARKING STALL SEE DET. 2/C-13.
3. PAVEMENT ARROW MARKING. SEE DET. 9/C-13.
4. "NO PARKING" PAVEMENT LETTERING (TRAFFIC GRADE PAINT). SEE DET. 8/C-13.
5. 12" WHITE STOP BAR (THERMOPLASTIC EXTRUSION)
6. 4" WHITE EDGE LINE (THERMOPLASTIC EXTRUSION) SEE DET. 10/C-13.
7. 45° – 4" WHITE TRANSVERSE MARKING 2' O.C. (THERMOPLASTIC EXTRUSION)
8. 4" WHITE PARKING STALL STRIPING (THERMOPLASTIC EXTRUSION)

NOTES:

REFER TO PAVEMENT MARKING DETAILS ON DRAWING NO. C-12, C-13 AND C-14.

LEGEND:

——— – ——— BASE LINE

GRAPHIC SCALE

20' 0 20' 40'

SCALE: 1"=20'

REVISION NO.	SYM.	DESCRIPTION	SHT OF	DATE	APPROVED:

PERICLES M. MANTHOS
LICENSED PROFESSIONAL ENGINEER
No. 7833-C
HAWAII, U.S.A.

License Expiration Date 04-30-18

THIS WORK WAS PREPARED BY ME OR UNDER MY SUPERVISION AND CONSTRUCTION OF THIS PROJECT WILL BE UNDER MY OBSERVATION AS DEFINED IN HAR TITLE 16, CHAPTER 115, RULES OF THE BOARD OF PROFESSIONAL ENGINEERS, ARCHITECTS AND SURVEYORS, STATE OF HAWAII

Signature 01-23-18 Date

DEPARTMENT OF DEFENSE
STATE OF HAWAII

REPAIR AND RESURFACE ACCESS ROAD AND PARKING LOT, BIRKHIMER EOC
HONOLULU, OAHU, HAWAII

STRIPING AND SIGNAGE PLAN

MANTHOS ENGINEERING, LLC

DESIGNED BY: KM	CHECKED BY: MO	JOB NO. CA-1325-C	DRAWING NO. C-10
DRAWN BY: KM	APPROVED BY: PM	DATE JAN, 2018	SHEET 12 OF 28 SHEETS
SCALE: 1" = 20'			

\\WE-FILESVR\Company\Projects - Civil Design\DOD Birkhimer Parking Lot and Access Road\Additional Work\100%\ALL_Submittal\SHT 12-13_Birkhimer5-55-R1.dwg 1/23/2018 11:30:15 AM, DWG To PDF.pc3

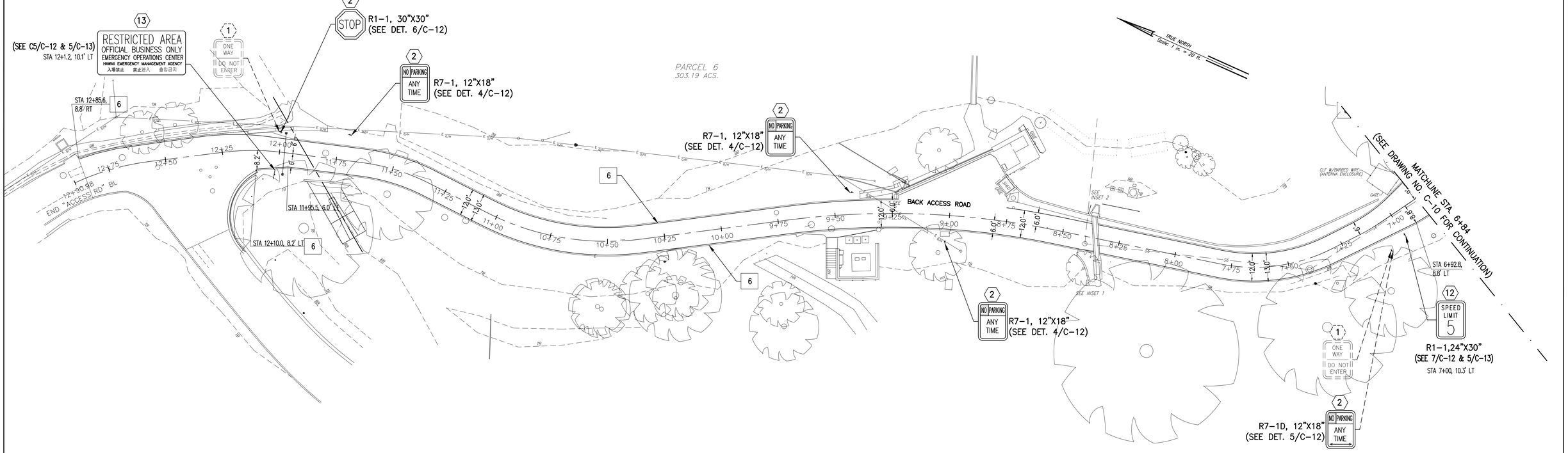

SIGNING LEGEND:

1. EXISTING SIGN AND POST(S) TO REMAIN
2. REMOVE EXISTING SIGN, REPLACE WITH NEW AND INSTALL NEW SIGN ON EXISTING POST.
3. INSTALL NEW RESERVED PARKING FOR VAN ACCESSIBLE PARKING SIGN AND POST. SEE DET(S). 1/C-12 & 6/C-13.
4. INSTALL NEW RESERVED ACCESSIBLE PARKING SIGN AND POST. SEE DET(S). 2/C-12 & 6/C-13.
5. INSTALL NEW ACCESS AISLE SIGN AND POST. SEE DET(S). 3/C-12 & 6/C-13.
6. INSTALL NEW DIRECTOR OF EMERGENCY MANAGEMENT SIGN ON EXIST. RETAINING WALL. SEE DET(S). C1/C-12 & 8/C-12.
7. INSTALL NEW RESERVED EMPLOYEE OF QUARTER SIGN ON EXIST. RETAINING WALL. SEE DET(S). C2/C-12 & X/C-13.
8. INSTALL NEW STATE VEHICLE ONLY SIGN AND POST SEE DET(S). C3/C-12 & 6/C-13.
9. INSTALL NEW VISITOR PARKING SIGN AND POST. SEE DET(S). C4/C-12 & 6/C-13.
10. INSTALL NEW VISITOR PARKING SIGN ON EXIST. RETAINING WALL. SEE DET(S). C4/C-12 & 8/C-12.
11. INSTALL NEW STOP SIGN AND POST. SEE DET(S). 6/C-12 & 5/C-13.
12. INSTALL NEW SPEED LIMIT 5 AND POST. SEE DET(S). 7/C-12 & 5/C-13.
13. INSTALL NEW RESTRICTED AREA SIGN AND POST. SEE DET(S). C5/C-12 & 5/C-13.

PAVEMENT MARKING LEGEND:

1. ANGLE PARKING STALL. SEE DET. 1/C-13.
2. ACCESSIBLE PARKING STALL SEE DET. 2/C-13.
3. PAVEMENT ARROW MARKING. SEE DET. 9/C-13.
4. "NO PARKING" PAVEMENT LETTERING (TRAFFIC GRADE PAINT). SEE DET. 8/C-13.
5. 12" WHITE STOP BAR (THERMOPLASTIC EXTRUSION)
6. 4" WHITE EDGE LINE (THERMOPLASTIC EXTRUSION) SEE DET. 10/C-13.
7. 45° – 4" WHITE TRANSVERSE MARKING 2' O.C. (THERMOPLASTIC EXTRUSION)
8. 4" WHITE PARKING STALL STRIPING (THERMOPLASTIC EXTRUSION)

NOTES:

REFER TO PAVEMENT MARKING DETAILS ON DRAWING NO. C-12, C-13 AND C-14.

LEGEND:

——— – ——— BASE LINE

GRAPHIC SCALE

20' 0 20' 40'

SCALE: 1"=20'

REVISION NO.	SYM.	DESCRIPTION	SHT OF	DATE	APPROVED:

PERICLES M. MANTHOS
LICENSED PROFESSIONAL ENGINEER
No. 7833-C
HAWAII, U.S.A.

License Expiration Date 04-30-18

THIS WORK WAS PREPARED BY ME OR UNDER MY SUPERVISION AND CONSTRUCTION OF THIS PROJECT WILL BE UNDER MY OBSERVATION AS DEFINED IN HAR TITLE 16, CHAPTER 115, RULES OF THE BOARD OF PROFESSIONAL ENGINEERS, ARCHITECTS AND SURVEYORS, STATE OF HAWAII

Signature 01-23-18 Date

DEPARTMENT OF DEFENSE
STATE OF HAWAII

REPAIR AND RESURFACE ACCESS ROAD AND PARKING LOT, BIRKHIMER EOC
HONOLULU, OAHU, HAWAII

STRIPING AND SIGNAGE PLAN

MANTHOS ENGINEERING, LLC

DESIGNED BY: KM	CHECKED BY: MO	JOB NO. CA-1325-C	DRAWING NO. C-11
DRAWN BY: KM	APPROVED BY: PM	DATE JAN, 2018	SHEET 13 OF 28 SHEETS
SCALE:			

\\MK-FILESVR\Company\Projects - Civil Design\DOD Birkhimer Parking Lot and Access Road\Additional Work\100%RL_Submittal\SHT 12-13_Birkhimer5-SS-RL.dwg, 1/23/2018 11:31:23 AM, DWG To PDF.pc3

R7–8
12"X18"

R7–8a
12"X18"

1 C–12 VAN ACCESSIBLE PARKING STALL SIGN
SCALE: NTS

R7–8
12"X18"

2 C–12 ACCESSIBLE PARKING STALL SIGN
SCALE: NTS

R7–9
12"X18"

3 C–12 ACCESS AISLE PARKING STALL SIGN
SCALE: NTS

R7–1
12"X18"

4 C–12 NO PARKING SIGN
SCALE: NTS

R7–1D
12"X18"

5 C–12 NO PARKING SIGN WITH 2–WAY ARROW
SCALE: NTS

R1–1
30"X30"

6 C–12 STOP SIGN
SCALE: NTS

R2–1(5)
24"X30"

7 C–12 SPEED LIMIT SIGN
SCALE: NTS

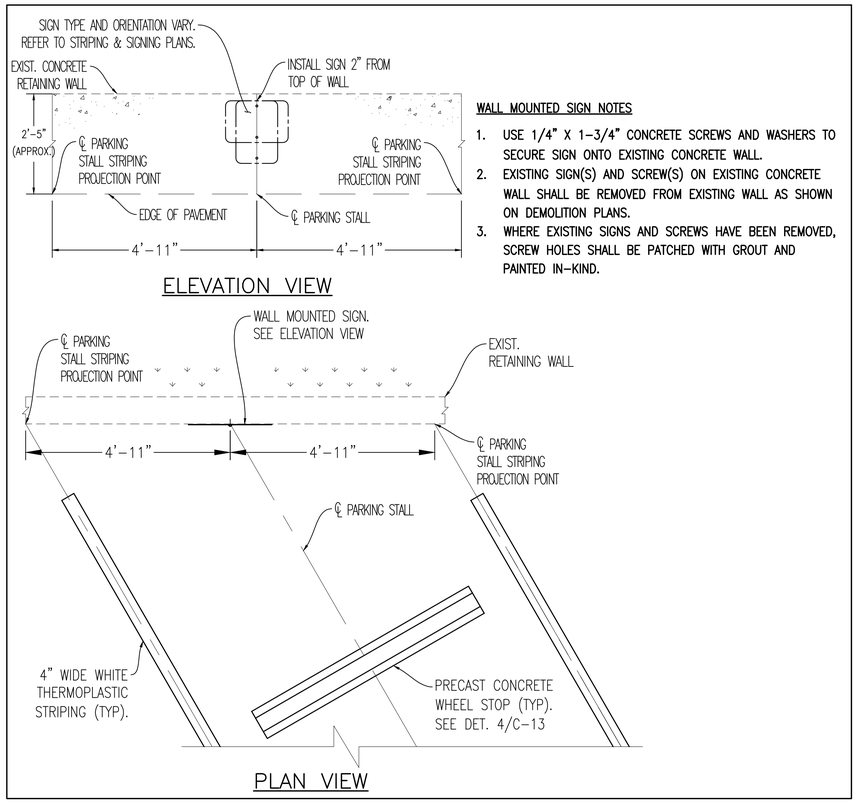

WALL MOUNTED SIGN NOTES

1. USE 1/4" X 1–3/4" CONCRETE SCREWS AND WASHERS TO SECURE SIGN ONTO EXISTING CONCRETE WALL.
2. EXISTING SIGN(S) AND SCREW(S) ON EXISTING CONCRETE WALL SHALL BE REMOVED FROM EXISTING WALL AS SHOWN ON DEMOLITION PLANS.
3. WHERE EXISTING SIGNS AND SCREWS HAVE BEEN REMOVED, SCREW HOLES SHALL BE PATCHED WITH GROUT AND PAINTED IN–KIND.

8 C–12 WALL MOUNTED SIGN INSTALLATION
SCALE: NTS

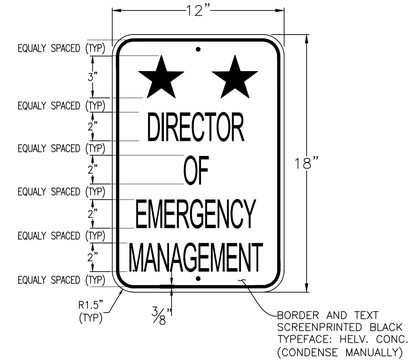

C1 C–12 DIRECTOR OF EMERGENCY MANAGEMENT SIGN
(CUSTOM 12"X18")
SCALE: NTS

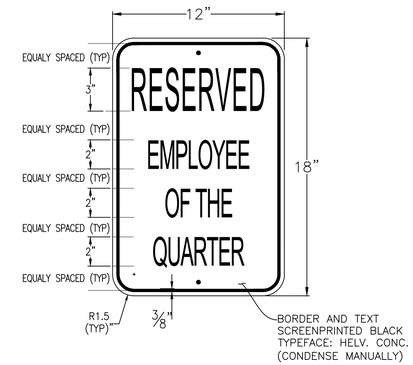

C2 C–12 EMPLOYEE OF THE QUARTER SIGN
(CUSTOM 12"X18")
SCALE: NTS

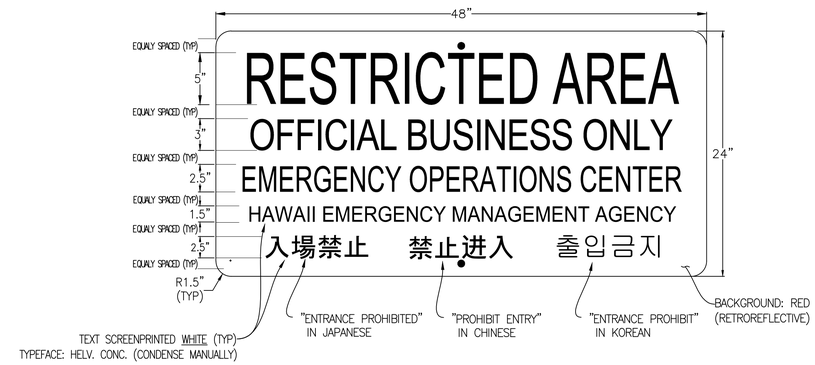

C5 C–12 RESTRICTED AREA SIGN
(CUSTOM 48"X24")
SCALE: NTS

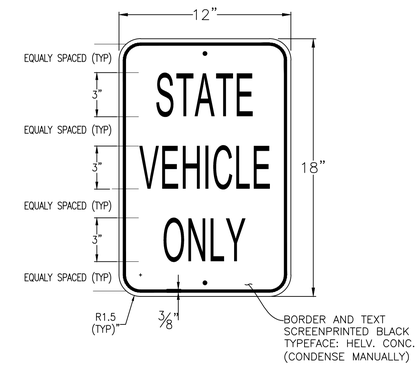

C3 C–12 STATE VEHICL ONLY SIGN
(CUSTOM 12"X18")
SCALE: NTS

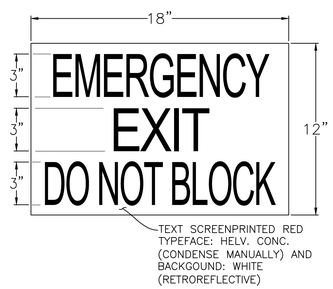

C6 C–12 EMERGENCY EXIT SIGN
(CUSTOM 18"X12")
SCALE: NTS

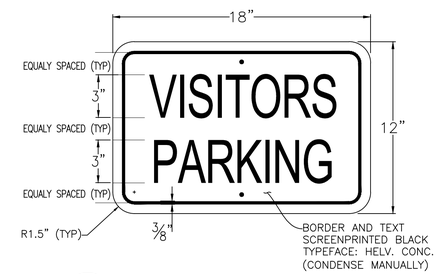

C4 C–12 VISITORS PARKING SIGN
(CUSTOM 18"X12")
SCALE: NTS

GENERAL NOTES

1. SIGNS SHALL CONFORM TO THE LATEST EDITION OF FHWA PUBLICATIONS "MANUAL ON UNIFORM TRAFFIC CONTROL DEVICES FOR STREETS AND HIGHWAYS", STANDARD ALPHABETS FOR HIGHWAYS SIGNS", AND THE AMERICANS WITH DISABILITIES ACCESSIBILITY GUIDELINES (ADAAG) SECTION 4.30, AS AMENDED.
2. SIGNS SHALL BE MINIMUM T6061 SHEET COVERED WITH ENGINEERING GRADE REFLECTIVE SHEETING.
3. SIGNS SHALL BE 0.063 INCH THICKNESS, EXCEPT FOR "STOP" SIGN (R1–1) AND "RESTRICTED AREA" SIGN SHALL BE 0.08 INCH THICKNESS.
4. ALL SIGNS SHALL HAVE PRE–DRILLED 3/8" DIA BOLT HOLES AT APPROPRIATE LOCATIONS.
5. SIGN LETTERING SHALL BE UPPERCASE LETTERS OF THE TYPE APPROVED BY THE FEDERAL HIGHWAY ADMINISTRATION.
6. BORDERS SHALL BE 3/8" THICKNESS.

REVISION NO.	SYM.	DESCRIPTION	SHT OF	DATE	APPROVED:
		SCALE: NTS			

PERICLES M. MANTHOS
LICENSED PROFESSIONAL ENGINEER
No. 7833–C
HAWAII, U.S.A.

License Expiration Date 04–30–18

THIS WORK WAS PREPARED BY ME OR UNDER MY SUPERVISION AND CONSTRUCTION OF THIS PROJECT WILL BE UNDER MY OBSERVATION AS DEFINED IN HAR TITLE 16, CHAPTER 115, RULES OF THE BOARD OF PROFESSIONAL ENGINEERS, ARCHITECTS AND SURVEYORS, STATE OF HAWAII

Signature 01–23–18 Date

DEPARTMENT OF DEFENSE
STATE OF HAWAII

REPAIR AND RESURFACE ACCESS ROAD AND PARKING LOT, BIRKHIMER EOC
HONOLULU, OAHU, HAWAII

CIVIL DETAILS I

MANTHOS ENGINEERING, LLC		JOB NO. CA–1325–C	DRAWING NO. C–12
DESIGNED BY: KM	CHECKED BY: MO		
DRAWN BY: KM	APPROVED BY: PM	DATE JAN, 2018	SHEET 14 OF 28 SHEETS
SCALE: AS SHOWN			

\\MF-FILES\RC\Company\Projects - Civil Design\DOD Birkhimer Parking Lot and Access Road\Additional Work\1009\RL Submittal\SHT 14-15, Birkhimer\C-CV DET R1.dwg, 1/23/2018 1:13:08 AM, DWG To PDF.pc3

PARKING STALL WITHOUT SIGN AND POST INSTALLATION

PARKING STALL WITH SIGN POST AND SURFACE MOUNTING BASE

NOTES

1. REFER TO STRIPING AND SIGNAGE PLANS FOR LOCATIONS OF PARKING STALLS WITH WALL MOUNTED SIGN AND SIGN POST AND SURFACE MOUNTING BASE INSTALLATION AND PARKING STALLS WITHOUT SIGN AND POST INSTALLATION.

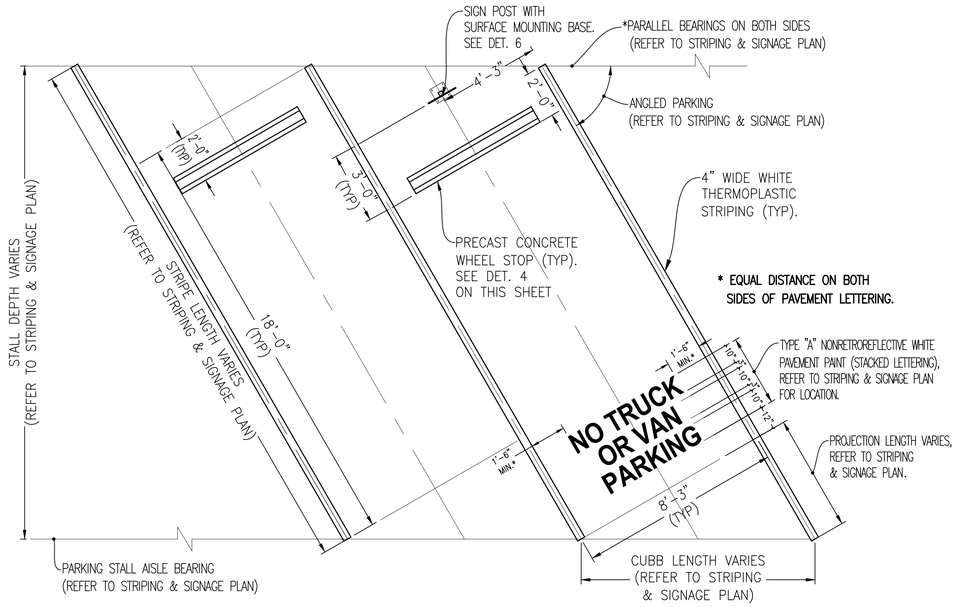

1 C-13 ANGLE PARKING STALLS WITH/WITHOUT SIGN INSTALLATION
SCALE: NTS

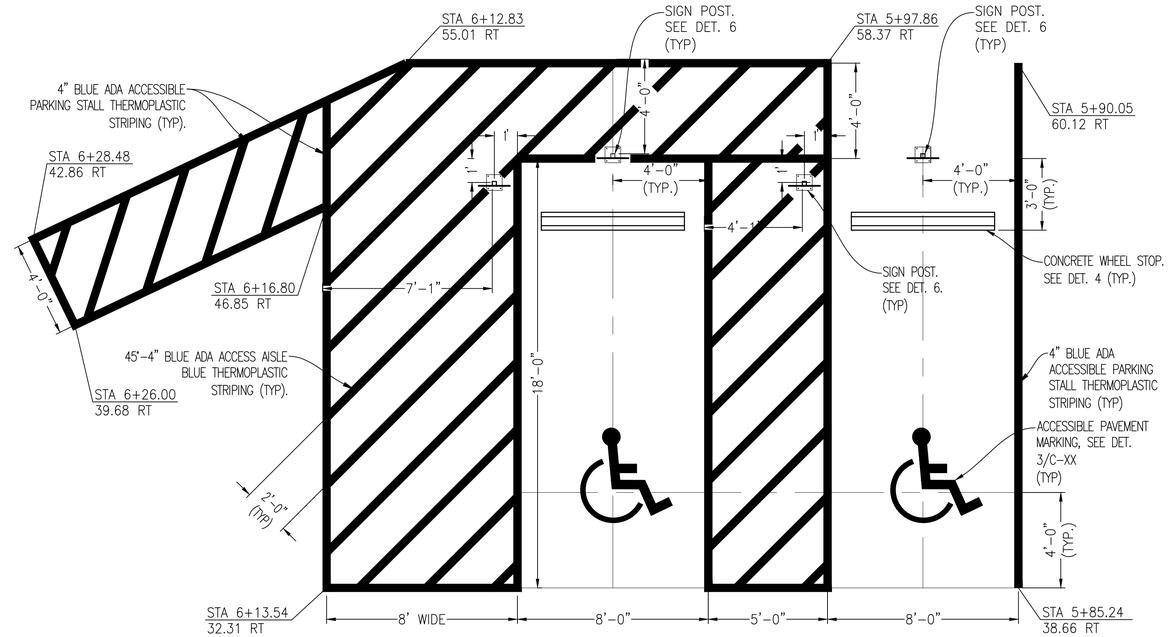

2 C-13 ACCESSIBLE PARKING STALL DETAIL
SCALE: NTS

ANCHOR POST NOTES

1. KEEP INSIDE OF 2-1/4" ANCHOR POST FREE FROM IMPEDIMENTS THAT PREVENT PROPER SEATING OF 2" SIGN POST.
2. SQUARE TUBING SIGN POST SHALL BE TELESCOPING TYPE WITH 7/16" DIA. HOLES AT 1" O.C. ON FOUR SIDES.
3. USE 5/16" X 2-3/4" GALVANIZED BOLTS, NUTS AND WASHERS TO SECURE THE SQUARE TUBING 5/16" X 2-3/4" BOLTS TO SECURE THE SQUARE TUBING POST ONTO THE 2-1/4" SQUARE TUBE ANCHOR POST.
4. SIGN(S) INSTALLATION ON ANCHOR POST MUST MEET LATERAL AND HEIGHT CLEARANCES, INCLUDING NEW SIGNS THAT WILL BE POSTED ON TO EXISTING SIGN POST. EXTEND, RELOCATE OR REPLACE AS REQUIRED TO MEET CLEARANCE REQUIREMENTS.
5. UNDERGROUND UTILITIES SHALL BE SURVEYED AND PROVIDED IN A UTILITY LOCATION REPORT THAT INCLUDES HORIZONTAL AND VERTICAL LOCATIONS FOR ENGINEER'S REVIEW PRIOR TO CONSTRUCTION.

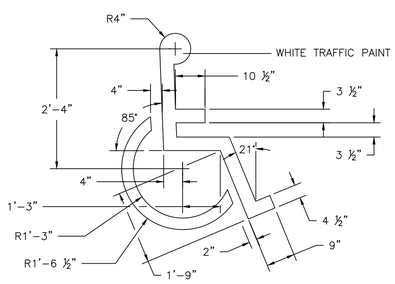

3 C-13 ACCESSIBLE PAVEMENT MARKING DETAIL
SCALE: NTS

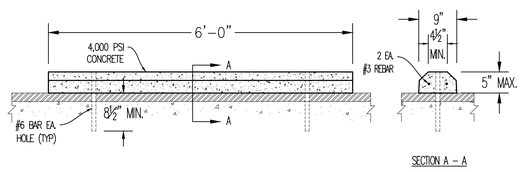

4 C-13 PRECAST CONCRETE WHEEL STOP
SCALE: NTS

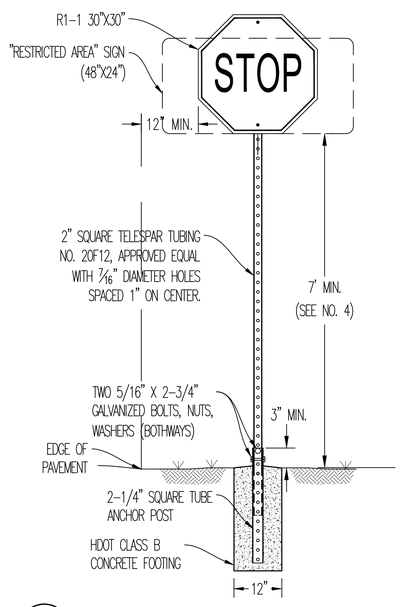

5 C-13 INSTALLATION OF NEW SIGN POST WITH CONCRETE FOOTING
SCALE: NTS

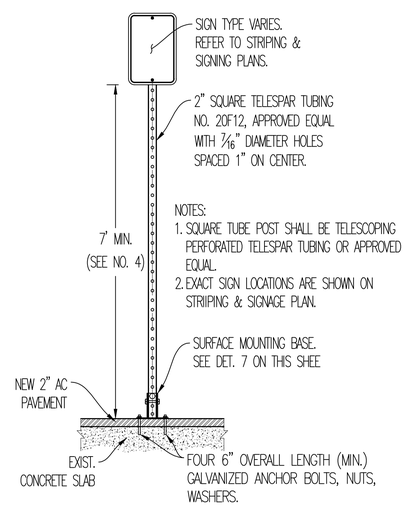

6 C-13 INSTALLATION OF NEW SIGN POST WITH SURFACE MOUNTING BASE
SCALE: NTS

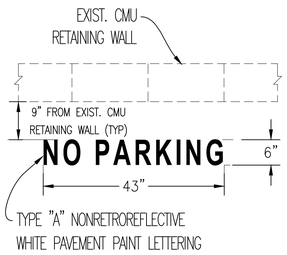

8 C-13 "NO PARKING" LETTERING DETAIL
SCALE: NTS

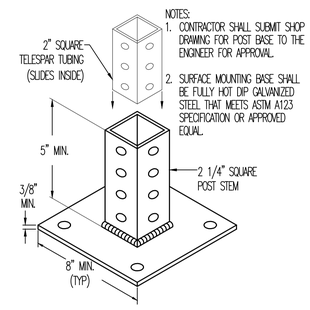

7 C-13 SURFACE MOUNTING BASE
SCALE: NTS

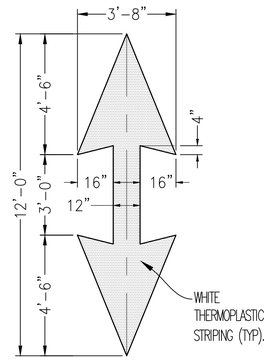

9 C-13 PAVEMENT ARROW MARKING
SCALE: NTS

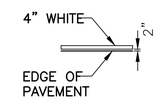

10 C-13 4"-WHITE EDGE LINE
SCALE: NTS

REVISION NO.	SYM.	DESCRIPTION	SHT OF	DATE	APPROVED:

PERICLES M. MANTHOS LICENSED PROFESSIONAL ENGINEER No. 7833-C HAWAII, U.S.A.

License Expiration Date 04-30-18

THIS WORK WAS PREPARED BY ME OR UNDER MY SUPERVISION AND CONSTRUCTION OF THIS PROJECT WILL BE UNDER MY OBSERVATION AS DEFINED IN HAR TITLE 16, CHAPTER 115, RULES OF THE BOARD OF PROFESSIONAL ENGINEERS, ARCHITECTS AND SURVEYORS, STATE OF HAWAII

Signature 01-23-18 Date

DEPARTMENT OF DEFENSE
STATE OF HAWAII

REPAIR AND RESURFACE ACCESS ROAD AND PARKING LOT, BIRKHIMER EOC
HONOLULU, OAHU, HAWAII

MISCELLANEOUS DETAILS II

MANTHOS ENGINEERING, LLC		JOB NO.	DRAWING NO.
DESIGNED BY: KM	CHECKED BY: MO	CA-1325-C	C-13
DRAWN BY: KM	APPROVED BY: PM	DATE JAN, 2018	SHEET 15 OF 28 SHEETS
SCALE: AS SHOWN			

\\ME-FILESVR\Company\Projects - Civil Design\DOD Birkhimer Parking Lot and Access Road\Additional Work\L00HUL_Submittal\SHT 14-15_Birkhimer5-CIV DET-R1.dwg, 1/23/2018 11:33:34 AM, DWG To PDF.pc3

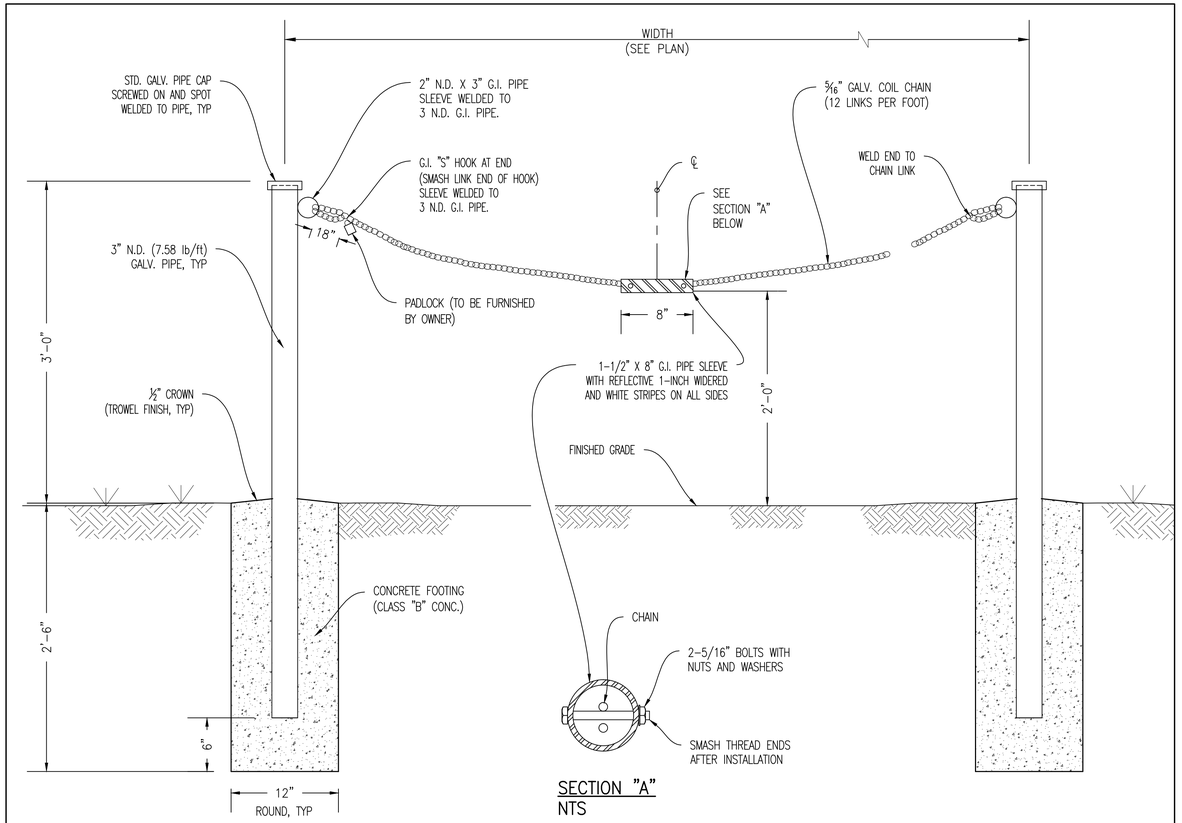

SECTION "A"
NTS

NOTES

1. ALL WELDED CONNECTIONS SHALL BE PAINTED WITH TWO COATS OF Z.R.C. COLD GALVANIZING COMPOUND.
2. "S" HOOK SHALL BE 5/16" ø WITH TIP TAPERED TO 3/16".
3. NO SPLICING SHALL BE ALLOWED ON G.I. PIPE POSTS.
4. ALL PIPE SIZES ARE NOMINAL DIAMETER (N.D.).

1 / C-14 ACCESS CHAIN BARRIER DETAIL
SCALE: NTS

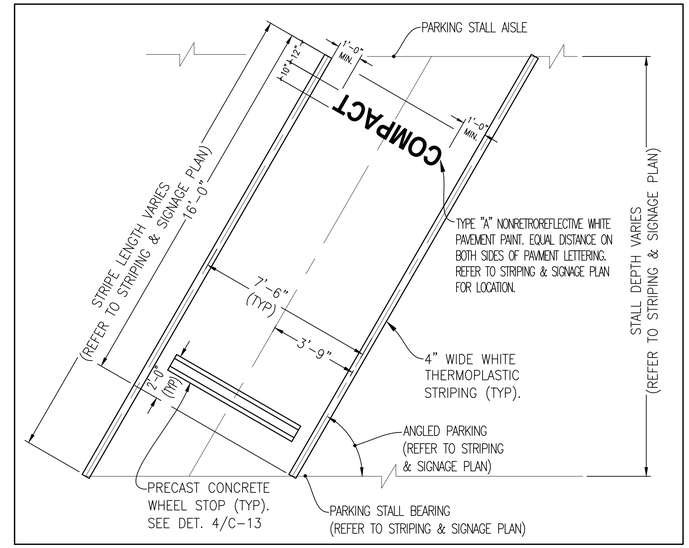

2 / C-14 ANGLE COMPACT PARKING STALL
SCALE: NTS

REVISION NO.	SYM.	DESCRIPTION	SHT OF	DATE	APPROVED:

PERICLES M. MANTHOS
LICENSED PROFESSIONAL ENGINEER
No. 7833-C
HAWAII, U.S.A.

License Expiration Date 04-30-18

THIS WORK WAS PREPARED BY ME OR UNDER MY SUPERVISION AND CONSTRUCTION OF THIS PROJECT WILL BE UNDER MY OBSERVATION AS DEFINED IN HAR TITLE 16, CHAPTER 115, RULES OF THE BOARD OF PROFESSIONAL ENGINEERS, ARCHITECTS AND SURVEYORS, STATE OF HAWAII

Signature 01-23-18 Date

DEPARTMENT OF DEFENSE
STATE OF HAWAII

REPAIR AND RESURFACE ACCESS ROAD AND PARKING LOT, BIRKHIMER EOC
HONOLULU, OAHU, HAWAII

CIVIL DETAILS III

MANTHOS ENGINEERING, LLC

DESIGNED BY: KM	CHECKED BY: MO	JOB NO. CA-1325-C	DRAWING NO. C-14
DRAWN BY: KM	APPROVED BY: PM	DATE JAN, 2018	SHEET 16 OF 28 SHEETS
SCALE: AS SHOWN			

\\MC FILES\PW\Company Projects - Civil Design\DOD Birkhimer Parking Lot and Access Road\Additional Work\100%RL Submittal\SHT 14-15_Birkhimer5-CIV DET R1.dwg, 1/23/2018 11:13:58 AM, DWG To PDF.pc3

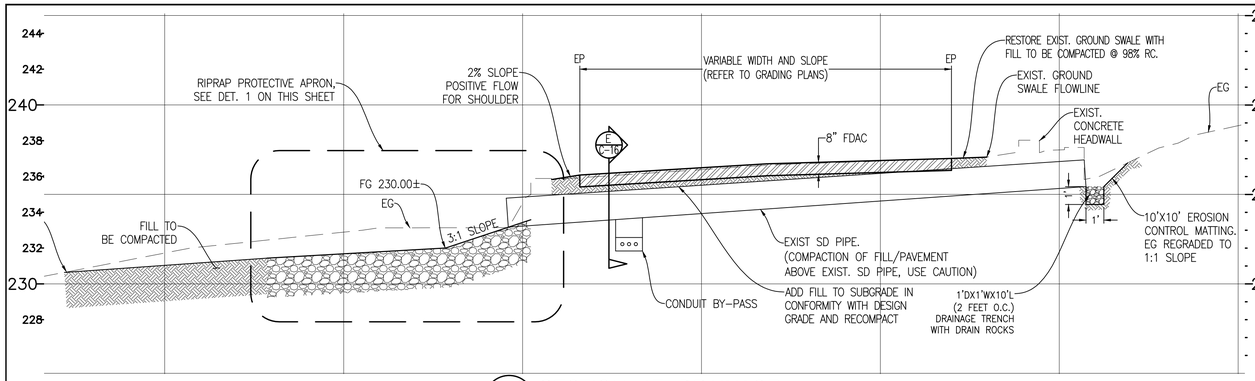

A C-15 SECTION AT DRAINAGE CULVERT NO. 1

SCALE: HORIZ. 1" = 4'
VERT. 1"= 4'

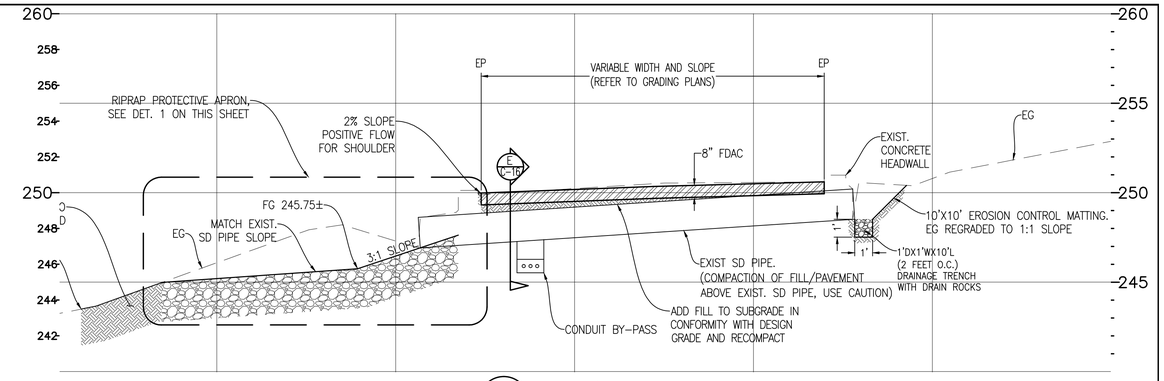

B C-15 SECTION AT DRAINAGE CULVERT NO. 2

SCALE: HORIZ. 1" = 4'
VERT. 1"= 4'

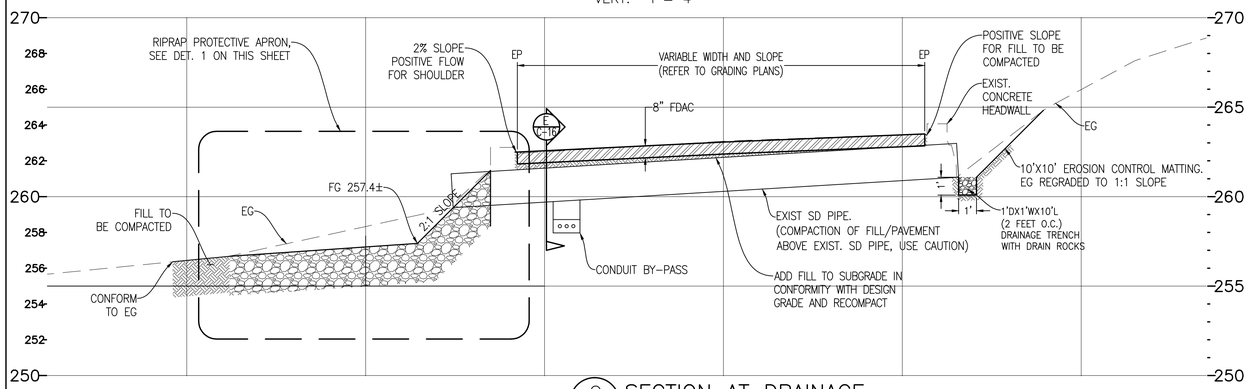

C C-15 SECTION AT DRAINAGE CULVERT NO. 3

SCALE: HORIZ. 1" = 4'
VERT. 1"= 4'

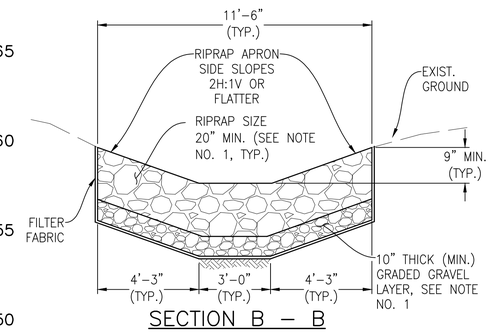

SECTION B – B

SCALE: NTS

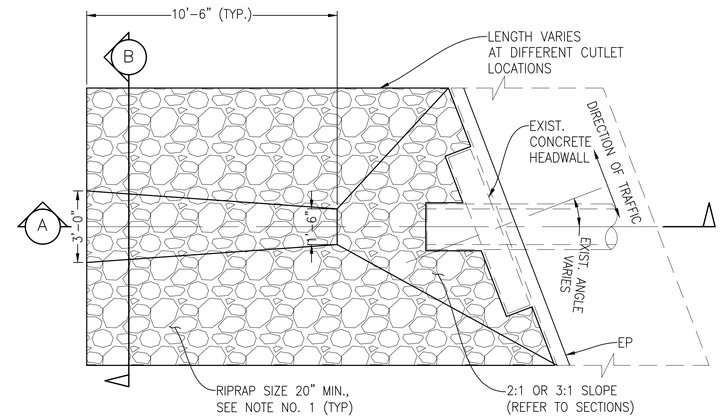

1 GROUTED RIPRAP PROTECTIVE APRON PLAN AT CULVERT OUTLET WITH DITCH

SCALE: NTS

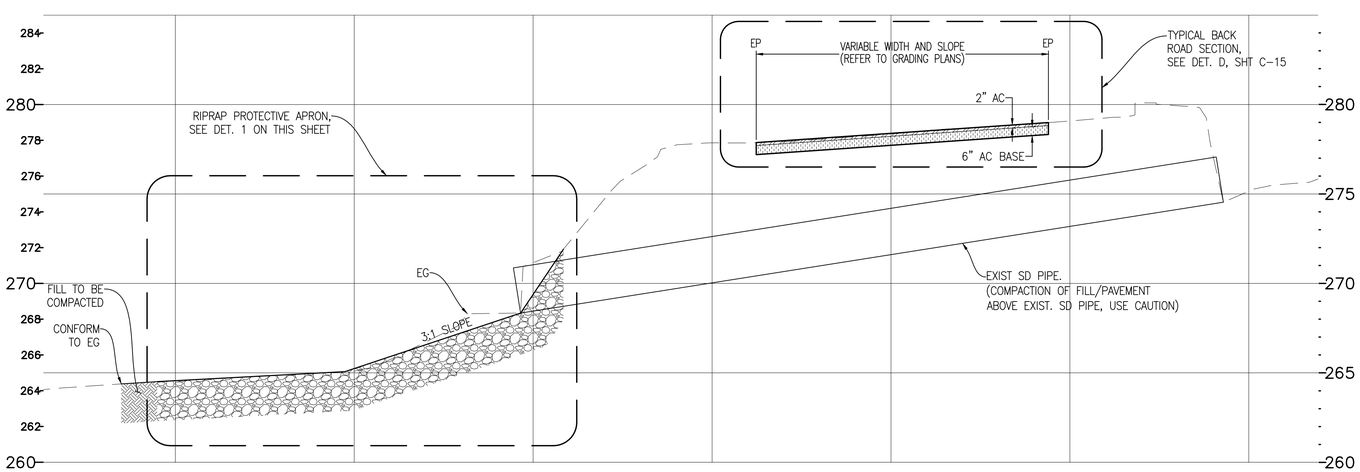

D C-15 SECTION AT DRAINAGE CULVERT NO. 4

SCALE: HORIZ. 1" = 4'
VERT. 1"= 4'

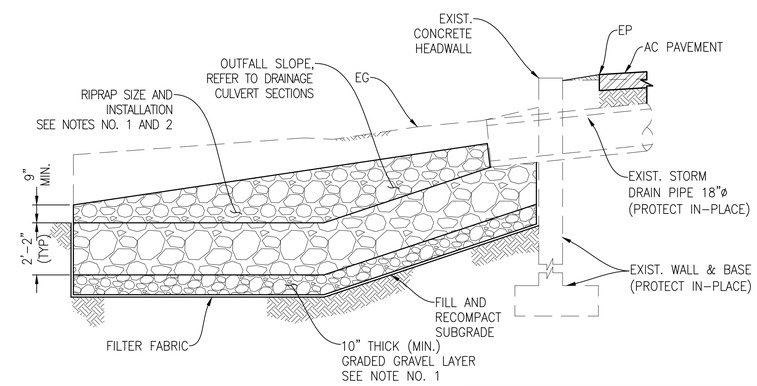

SECTION A – A

SCALE: NTS

NOTES:

1. RIPRAP ROCKS SHALL BE HAND-PLACED AND DUMPED ONTO FILTER FABRIC PROTECTED WITH A 10" THICK (MIN.) GRADED GRAVEL LAYER, AND THE DUMP HEIGHT LIMITED TO TWICE THE DEPTH OF THE GRAVEL PROTECTION LAYER THICKNESS.

2. RIPRAP SIZE SHALL BE COMPOSED OF A WELL-GRADED MIXTURE OF STONE SIZE. FIFTY PERCENT OF THE MIXTURE SHALL BE 12-INCH STONE (D50), AND THE LARGEST STONE OF THE MIXTURE SHALL BE 18 INCHES.

ABBREVIATIONS:

AC	ASPHALT CONCRETE
EG	EXISTING GROUND
EP	EDGE OF PAVEMENT
FDAC	FULL DEPTH ASPHALT CONCRETE
FG	FINISHED GRADE
SD	STORM DRAINAGE

REVISION NO.	SYM.	DESCRIPTION	SHT OF	DATE	APPROVED:

PERICLES M. MANTHOS LICENSED PROFESSIONAL ENGINEER No. 7833-C HAWAII, U.S.A.

License Expiration Date 04-30-18

THIS WORK WAS PREPARED BY ME OR UNDER MY SUPERVISION AND CONSTRUCTION OF THIS PROJECT WILL BE UNDER MY OBSERVATION AS DEFINED IN HAR TITLE 16, CHAPTER 115, RULES OF THE BOARD OF PROFESSIONAL ENGINEERS, ARCHITECTS AND SURVEYORS, STATE OF HAWAII

Signature 01-23-18 Date

DEPARTMENT OF DEFENSE
STATE OF HAWAII

REPAIR AND RESURFACE ACCESS ROAD AND PARKING LOT, BIRKHIMER EOC
HONOLULU, OAHU, HAWAII

CROSS SECTIONS - DRAINAGE CULVERTS

MANTHOS ENGINEERING, LLC

DESIGNED BY: KM	CHECKED BY: MO	JOB NO. CA-1325-C	DRAWING NO. C-15
DRAWN BY: KM	APPROVED BY: PM	DATE JAN, 2018	SHEET 17 OF 28 SHEETS
SCALE:			

\\MF-FILESVR\Company\Projects - Civil Design\DOD Birkhimer Parking Lot and Access Road\Additional Work\100%RL_Submittal\SHT 16-18_Birkhimer5-PVT SEC #1.dwg, 1/23/2018 11:35:32 AM, DWG To PDF.pc3

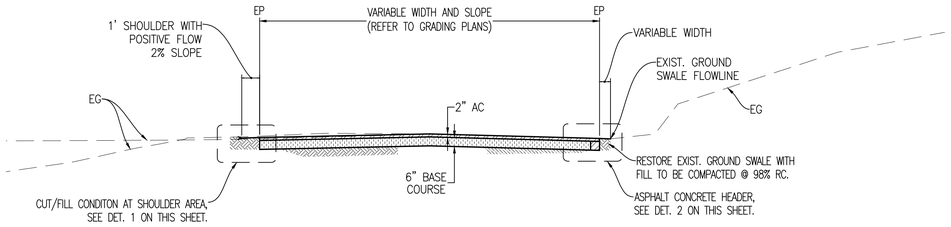

A C-16 TYPICAL ACCESS ROAD SECTION
SCALE: NTS

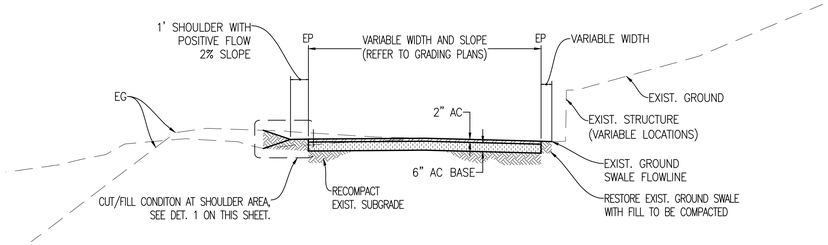

D C-16 TYPICAL BACK ACCESS ROAD SECTION
SCALE: NTS

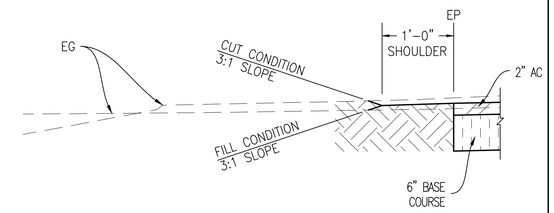

1 CUT/FILL CONDITION AT SHOULDER AREA (3:1 SLOPE)
SCALE: NTS

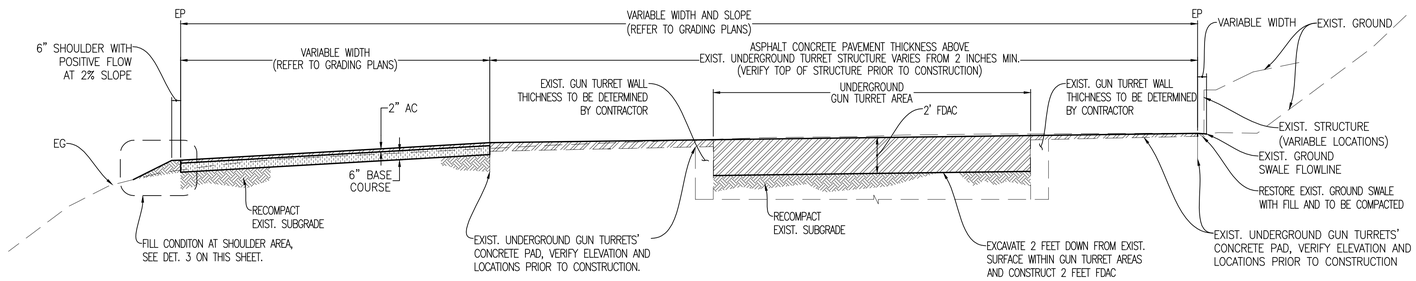

B C-16 TYPICAL PARKING LOT SECTION
WITH UNDERGROUND GUN TURRET CONDITION
SCALE: NTS

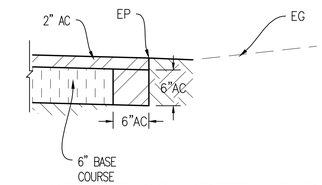

2 ASPHALT CONCRETE HEADER
SCALE: NTS

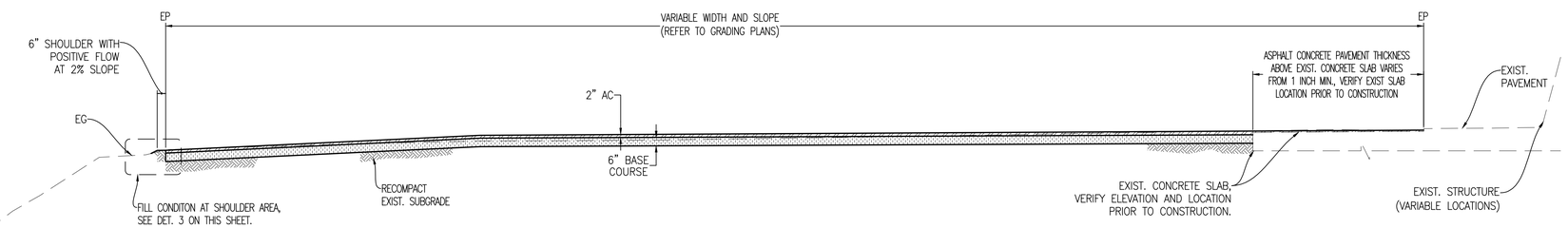

C C-16 TYPICAL PARKING LOT SECTION
SCALE: NTS

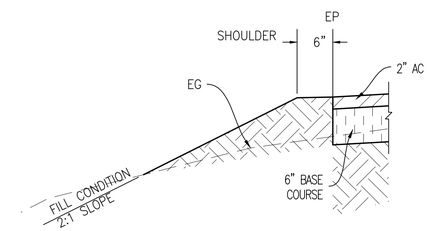

3 FILL CONDITION AT SHOULDER AREA (2:1 SLOPE)
SCALE: NTS

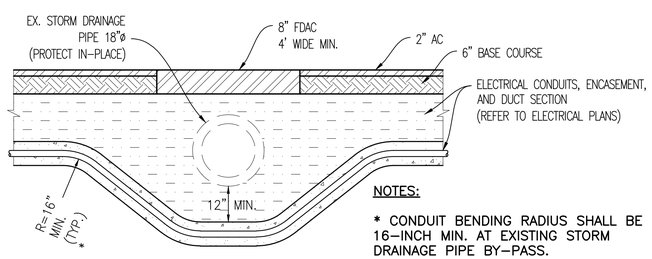

NOTES:

* CONDUIT BENDING RADIUS SHALL BE 16-INCH MIN. AT EXISTING STORM DRAINAGE PIPE BY-PASS.

E C-16 CONDUIT BY-PASS DETAIL AT EXISTING STORM DRAINAGE PIPE
SCALE: NTS

ABBREVIATIONS:

AC	ASPHALT CONCRETE
EG	EXISTING GROUND
EP	EDGE OF PAVEMENT
FDAC	FULL DEPTH ASPHALT CONCRETE
R	RADIUS
SD	STORM DRAINAGE

REVISION NO.	SYM.	DESCRIPTION	SHT OF	DATE	APPROVED:

PERICLES M. MANTHOS
LICENSED PROFESSIONAL ENGINEER
No. 7833-C
HAWAII, U.S.A.

License Expiration Date 04-30-18

THIS WORK WAS PREPARED BY ME OR UNDER MY SUPERVISION AND CONSTRUCTION OF THIS PROJECT WILL BE UNDER MY OBSERVATION AS DEFINED IN HAR TITLE 16, CHAPTER 115, RULES OF THE BOARD OF PROFESSIONAL ENGINEERS, ARCHITECTS AND SURVEYORS, STATE OF HAWAII

Signature 01-23-18 Date

DEPARTMENT OF DEFENSE
STATE OF HAWAII

REPAIR AND RESURFACE ACCESS ROAD AND PARKING LOT, BIRKHIMER EOC
HONOLULU, OAHU, HAWAII

TYPICAL CROSS SECTIONS

MANTHOS ENGINEERING, LLC

DESIGNED BY: KM	CHECKED BY: MO	JOB NO. CA-1325-C	DRAWING NO. C-16
DRAWN BY: KM	APPROVED BY: PM	DATE JAN, 2018	SHEET 18 OF 28 SHEETS
SCALE:			

\\ME-FILESVR\Company\Projects - Civil Design\DOD Birkhimer Parking Lot and Access Road\Additional Work\100%RL_Submittal\SHT 16-18_Birkhimer5-PVT SEC-R1.dwg, 1/23/2018 11:36:24 AM, DWG To PDF.pc3

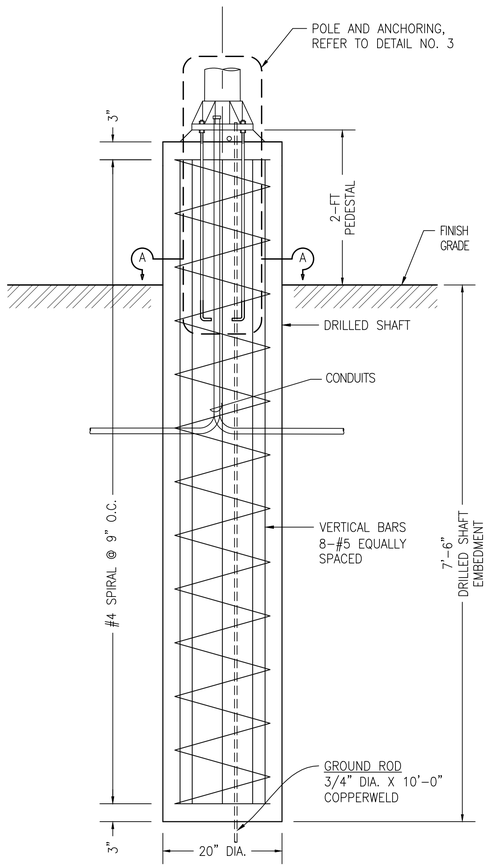

1 REINFORCED CONCRETE LIGHT POLE FOUNDATION CAST-IN DRILLED SHAFT WITH 2-FOOT PEDESTAL 7.5-FOOT EMBEDMENT

SCALE: NTS

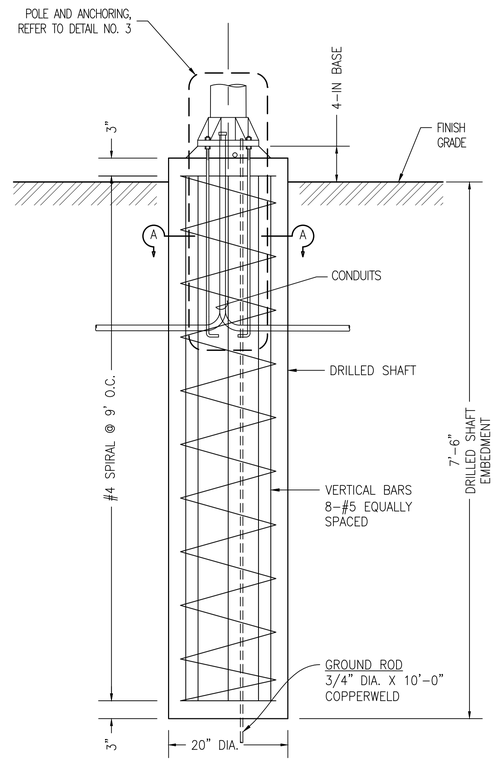

2 REINFORCED CONCRETE LIGHT POLE FOUNDATION CAST-IN DRILLED SHAFT WITH 4-INCH BASE AND 7.5-FOOT EMBEDMENT

SCALE: NTS

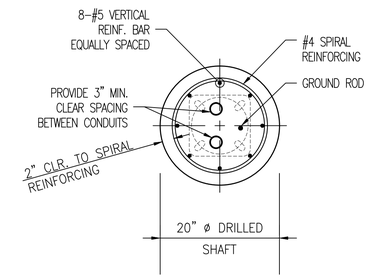

SECTION A – A

SCALE: NTS

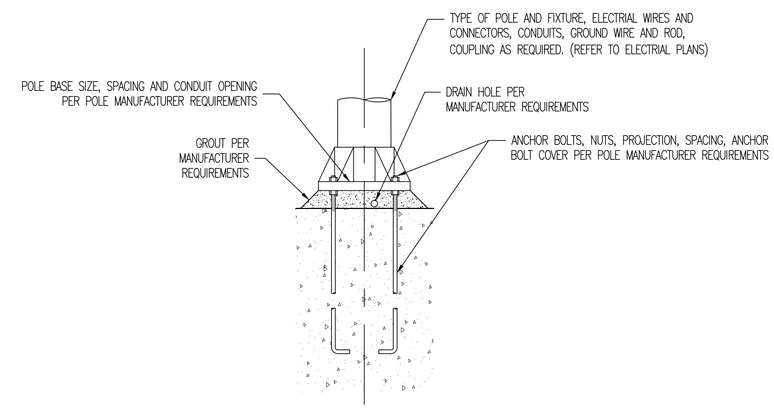

3 LIGHT POLE ANCHORAGE DETAIL

SCALE: NTS

NOTES:

1. CONCRETE FOR DRILLED SHAFT SHALL HAVE MINIMUM COMPRESSIVE STRENGTH f'c = 4,500 PSI WITH A MAXIMUM W/C RATIO OF 0.45 IN CONFORMANCE WITH SECTION 511 OF HDOT 2005 STANDARD SPECIFICTIONS.
2. CONTRACTOR SHALL NOTIFY THE ENGINEER 48 HOURS IN ADVANCE BEFORE SCHEDULING CONCRETE POUR FOR DRILLED SHAFTS. STEEL REINFORCMENT AND ANCHORING IN THE DRILLED SHAFTS SHALL BE INSPECTED BY THE ENGINEER PRIOR TO CONCRETE POUR.
3. UNDERGROUND UTILITIES SHALL BE SURVEYED AND PROVIDED IN A UTILITY LOCATION REPORT THAT INCLUDES HORIZONTAL AND VERTICAL LOCATIONS FOR ENGINEER'S REVIEW PRIOR TO CONSTRUCTION.

REVISION NO.	SYM.	DESCRIPTION	SHT OF	DATE	APPROVED:

PERICLES M. MANTHOS
LICENSED PROFESSIONAL ENGINEER
No. 7833-C
HAWAII, U.S.A.

License Expiration Date 04-30-18

THIS WORK WAS PREPARED BY ME OR UNDER MY SUPERVISION AND CONSTRUCTION OF THIS PROJECT WILL BE UNDER MY OBSERVATION AS DEFINED IN HAR TITLE 16, CHAPTER 115, RULES OF THE BOARD OF PROFESSIONAL ENGINEERS, ARCHITECTS AND SURVEYORS, STATE OF HAWAII

Signature 01-23-18 Date

DEPARTMENT OF DEFENSE
STATE OF HAWAII

REPAIR AND RESURFACE ACCESS ROAD AND PARKING LOT, BIRKHIMER EOC
HONOLULU, OAHU, HAWAII

LIGHT POLE FOUNDATION PLAN

MANTHOS ENGINEERING, LLC		JOB NO.	DRAWING NO.
DESIGNED BY: KM	CHECKED BY: MO	CA-1325-C	C-17
DRAWN BY: KM	APPROVED BY: PM	DATE JAN, 2018	SHEET 19 OF 28 SHEETS
SCALE:			

\\ME-FILES\RC\Company\Projects - Civil Design\DOD Birkhimer Parking Lot and Access Road\Additional Work\L0090A1_Submittals\SHT 16-18_Birkhimer5-PVT SEC-R1.dwg, 1/23/2018 11:37:05 AM, DWG To PDF.pc3

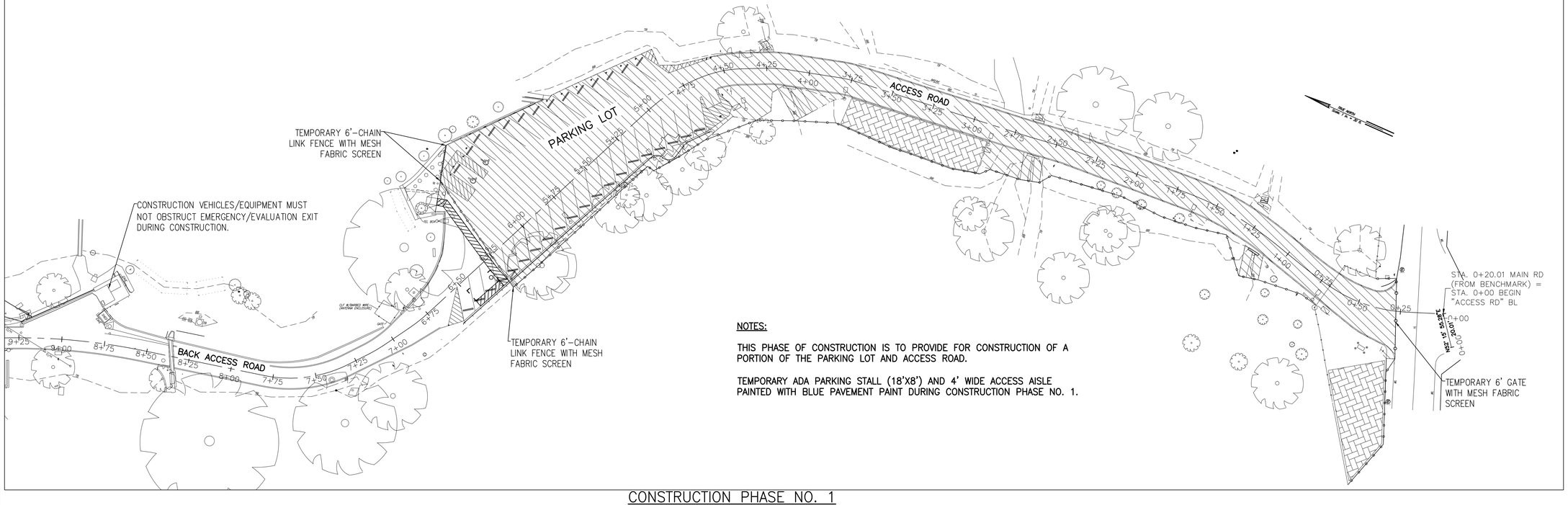

NOTES:

THIS PHASE OF CONSTRUCTION IS TO PROVIDE FOR CONSTRUCTION OF A PORTION OF THE PARKING LOT AND ACCESS ROAD.

TEMPORARY ADA PARKING STALL (18'X8') AND 4' WIDE ACCESS AISLE PAINTED WITH BLUE PAVEMENT PAINT DURING CONSTRUCTION PHASE NO. 1.

CONSTRUCTION PHASE NO. 1

SCALE: 1" = 30'

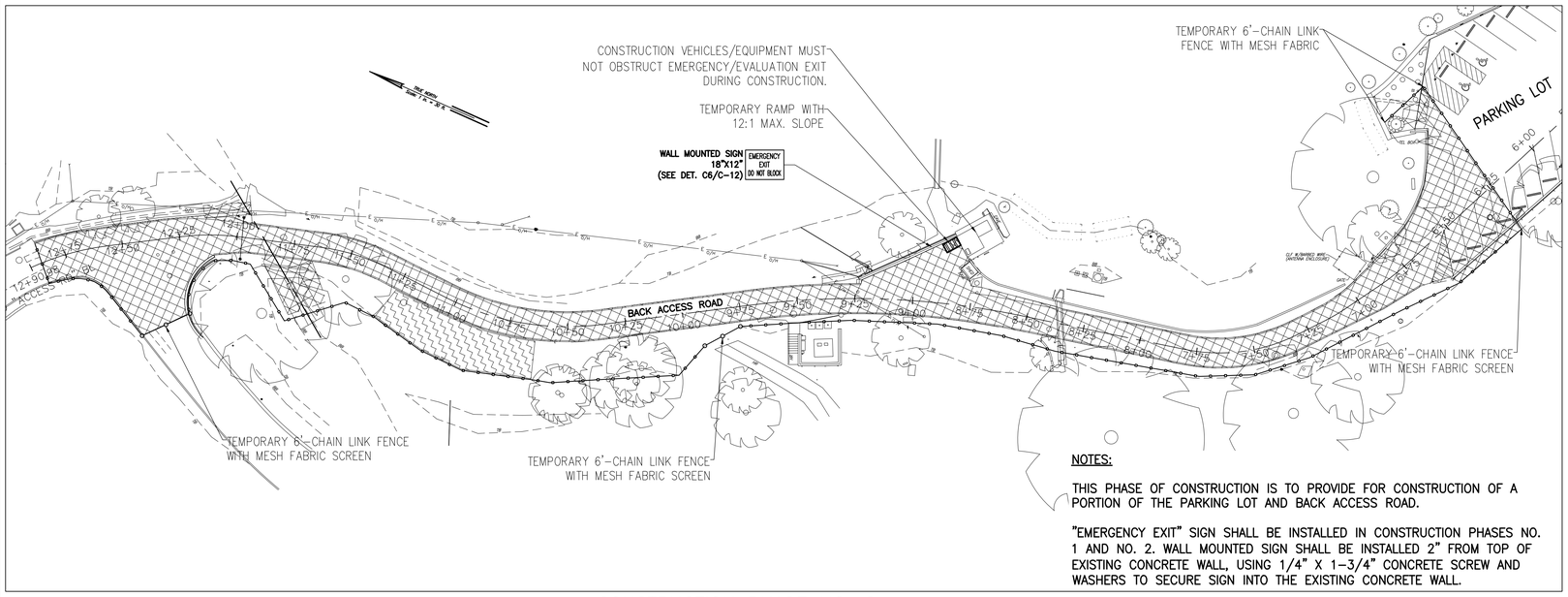

NOTES:

THIS PHASE OF CONSTRUCTION IS TO PROVIDE FOR CONSTRUCTION OF A PORTION OF THE PARKING LOT AND BACK ACCESS ROAD.

"EMERGENCY EXIT" SIGN SHALL BE INSTALLED IN CONSTRUCTION PHASES NO. 1 AND NO. 2. WALL MOUNTED SIGN SHALL BE INSTALLED 2" FROM TOP OF EXISTING CONCRETE WALL, USING 1/4" X 1-3/4" CONCRETE SCREW AND WASHERS TO SECURE SIGN INTO THE EXISTING CONCRETE WALL.

CONSTRUCTION PHASE NO. 2

SCALE: 1" = 30'

LEGEND

- PHASE NO. 1 – CONSTRUCTION AREA SHALL INCLUDE A TEMPORARY ADA PARKING STALL
- PHASE NO. 1 – STAGING AREA (DURING CONSTRUCTION PHASE NO. 2, EQUIPMENT PARKING IS ALLOWED IN THIS STAGE AREA EXCEPT FOR HEAVY EQUIPMENT.)
- PHASE NO. 2 – CONSTRUCTION AREA
- PHASE NO. 2 – STAGING AREA (DURING CONSTRUCTION PHASE NO. 1, EQUIPMENT PARKING IS ALLOWED IN THIS STAGE AREA EXCEPT FOR HEAVY EQUIPMENT.)
- TEMPORARY 6'-CHAIN LINK FENCE WITH MESH FABRIC SCREEN
- TEMPORARY 6'-GATE WITH MESH FABRIC SCREEN
- TEMPORARY ADA OR VIP PARKING STALL WITH 4' WIDE BLUE PAINTED ADA ACCESS AISLE FOR PHASE NO. 1
- AFTER REMOVAL OF EXIST. AC PAVEMENT SECTION, INSTALL TEMPORARY PEDESTRIAN RAMP IN COMPLANCE TO THE FOLLOWING:
  - 4 FEET WIDE, 1-INCH THICK PLYWOOD RAMP WITH 4" EDGE PROTECTION ALONG RAMP RUN BOTH SIDES OF THE RAMP.
  - 12:1 MAX. SLOPE AND NON-SKID SURFACE TRANSITIONING SMOOTHLY FROM EXIST. CONCRETE PAD TO SUBGRADE.
- BASE LINE

GRAPHIC SCALE

30' 0 30' 60'

SCALE: 1"=30'

REVISION NO.	SYM.	DESCRIPTION	SHT OF	DATE	APPROVED:

PERICLES M. MANTHOS
LICENSED PROFESSIONAL ENGINEER
No. 7833-C
HAWAII, U.S.A.

License Expiration Date 04-30-18

THIS WORK WAS PREPARED BY ME OR UNDER MY SUPERVISION AND CONSTRUCTION OF THIS PROJECT WILL BE UNDER MY OBSERVATION AS DEFINED IN HAR TITLE 16, CHAPTER 115, RULES OF THE BOARD OF PROFESSIONAL ENGINEERS, ARCHITECTS AND SURVEYORS, STATE OF HAWAII

Signature 01-23-18 Date

DEPARTMENT OF DEFENSE
STATE OF HAWAII

REPAIR AND RESURFACE ACCESS ROAD AND PARKING LOT, BIRKHIMER EOC
HONOLULU, OAHU, HAWAII

CONSTRUCTION PHASING AND STAGING

MANTHOS ENGINEERING, LLC		JOB NO.	DRAWING NO.
DESIGNED BY: KM	CHECKED BY: MO	CA-1325-C	C-18
DRAWN BY: KM	APPROVED BY: PM	DATE JAN, 2018	SHEET 20 OF 28 SHEETS
SCALE: 1" = 20'			

\\WE-FILESVR\Company\Projects - Civil Design\DOD Birkhimer Parking Lot and Access Road\Additional Work\100%RL_Submittal\SHT 19_Birkhimer's CP-R1.dwg, 1/23/2018 11:45:01 AM, DWG To PDF.pc3

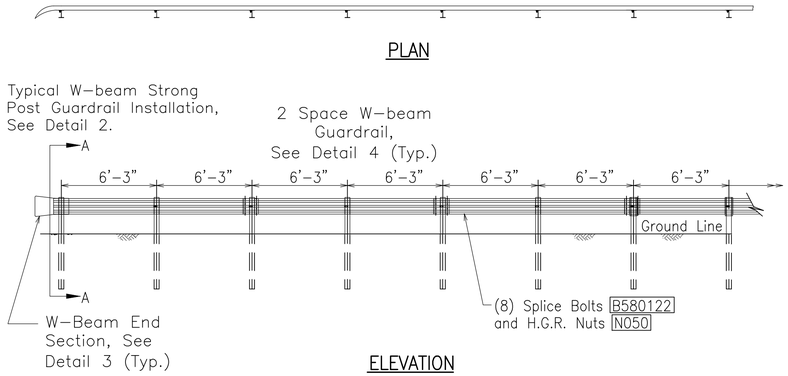

1 C-19 W-BEAM STRONG POST GUARDRAIL WITH END SECTION
SCALE: NTS

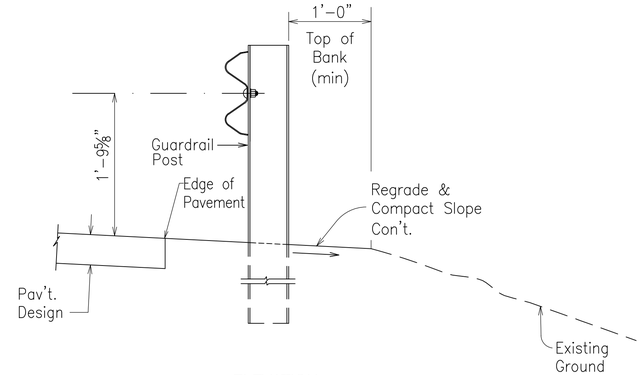

2 C-19 TYPICAL W-BEAM STRONG POST GUARDRAIL INSTALLATION
SCALE: NTS

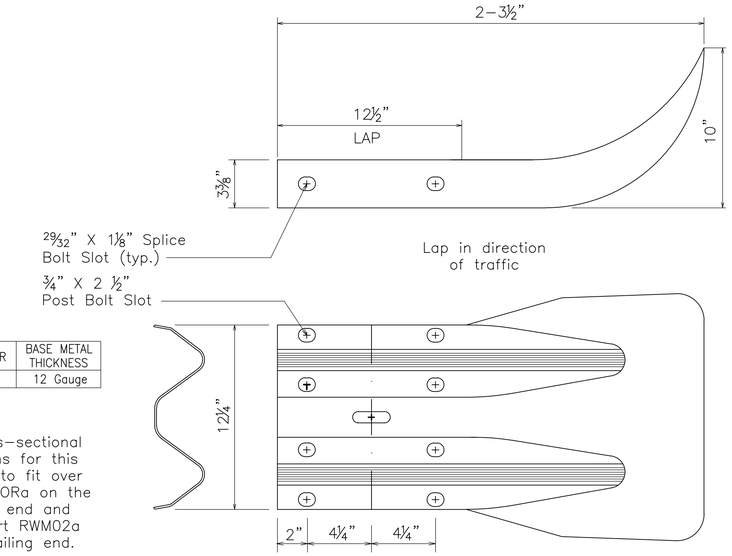

DESIGNATOR	BASE METAL THICKNESS
RWM01a	12 Gauge

The cross-sectional dimensions for this part are to fit over part RWMORa on the approach end and under part RWM02a on the tailing end.

3 C-19 W-BEAM END SECTION (FLARED RWM01a)
SCALE: NTS

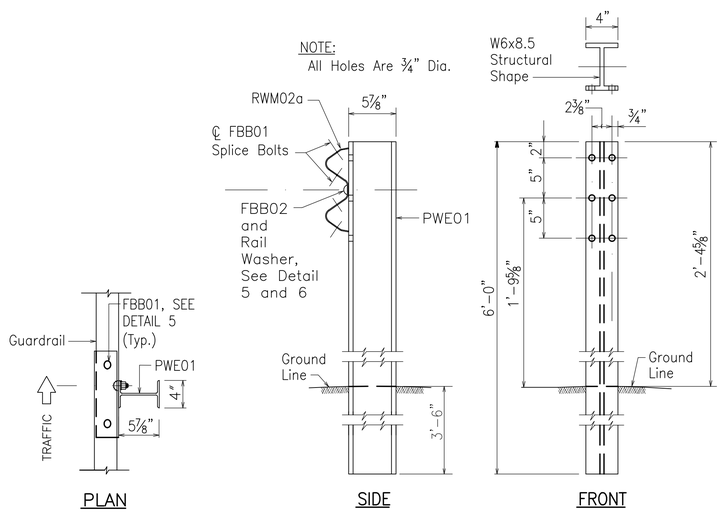

A C-19 W-BEAM STRONG POST (PWE01)
SCALE: NTS

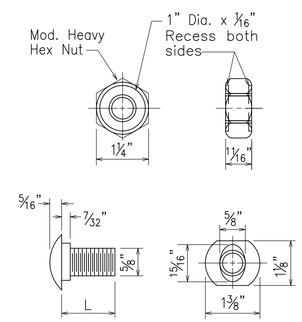

DESIGNATOR	L
FBB01	1⅜"
FBB02	2"

5 C-19 GUARDRAIL BOLTS AND RECESSED NUT
SCALE: NTS

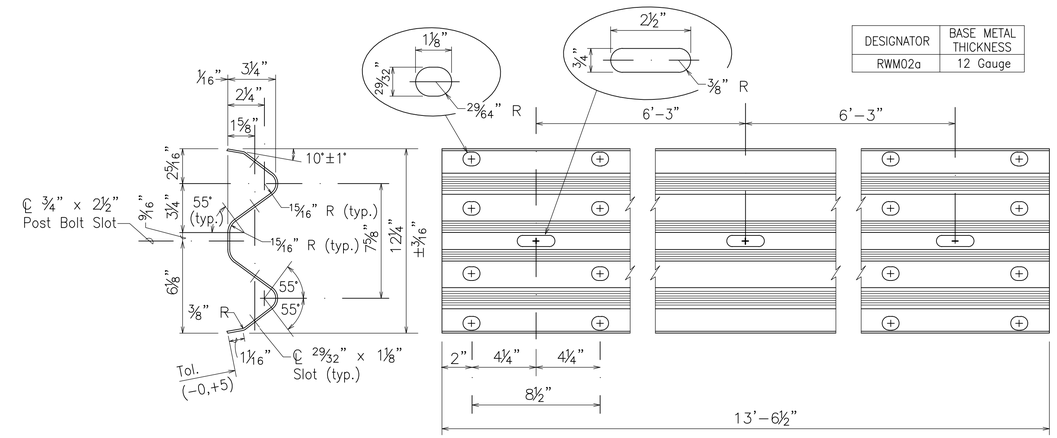

DESIGNATOR	BASE METAL THICKNESS
RWM02a	12 Gauge

4 C-19 2 SPACE W-BEAM GUARDRAIL (RWM02a)
SCALE: NTS

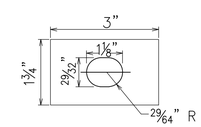

6 C-19 RAIL WASHER
SCALE: NTS

ADDITIVE ALTERNATE

GENERAL NOTES:

1. ALL HARDWARE, POSTS AND FASTENERS SHALL BE HOT-DIP ZINC COATED GALVANIZED AFTER FABRICATION. NO PUNCHING, DRILLING OR CUTTING WILL BE PERMITTED AFTER GALVANIZING.
2. ALL FASTENERS, POSTS, AND RAIL ELEMENTS (I.E. FBB03, PWE01, RWM02B, ETC.) SHALL CONFORM TO THE LATEST EDITION AND AMENDMENTS OF "A GUIDE TO STANDARDIZED HIGHWAY BARRIER RAIL HARDWARE", A REPORT PREPARED AND APPROVED BY THE AASHTO-AGC-ARTBA JOINT COOPERATIVE COMMITTEE, SUBCOMMITTEE ON NEW HIGHWAY MATERIALS, TASK FORCE 13 REPORT. DIMENSIONS OF FASTENERS, POSTS AND RAIL ELEMENTS HAVE BEEN CONVERTED FROM METRIC UNITS INTO THEIR PRESENT FORM.
3. ALL NEW GUARDRAIL SYSTEMS SHALL CONSISTS OF TOTAL LENGTH OF GUARDRAIL, POSTS, GUARDRAIL HARDWARE AND APPURTENCE.

REVISION NO.	SYM.	DESCRIPTION	SHT OF	DATE	APPROVED:

PERICLES M. MANTHOS
LICENSED PROFESSIONAL ENGINEER
No. 7833-C
HAWAII, U.S.A.
License Expiration Date 04-30-18

THIS WORK WAS PREPARED BY ME OR UNDER MY SUPERVISION AND CONSTRUCTION OF THIS PROJECT WILL BE UNDER MY OBSERVATION AS DEFINED IN HAR TITLE 16, CHAPTER 115, RULES OF THE BOARD OF PROFESSIONAL ENGINEERS, ARCHITECTS AND SURVEYORS, STATE OF HAWAII

Signature 01-23-18 Date

DEPARTMENT OF DEFENSE
STATE OF HAWAII

REPAIR AND RESURFACE ACCESS ROAD AND PARKING LOT, BIRKHIMER EOC
HONOLULU, OAHU, HAWAII

GUARDRAIL DETAILS AND NOTES

MANTHOS ENGINEERING, LLC

DESIGNED BY: KM	CHECKED BY: MO	JOB NO. CA-1325-C	DRAWING NO. C-19
DRAWN BY: KM	APPROVED BY: PM	DATE JAN, 2018	SHEET 21 OF 28 SHEETS
SCALE:			

\\AE-FILESVR\Company\Projects - Civil Design\DOD Birkhimer Parking Lot and Access Road\Additional Work\100908\5_Submittal\SHT 20_Birkhimer-RAILING-R1.dwg, 1/23/2018 2:27:00 PM, DWG To PDF.pc3

EROSION CONTROL AND WATER POLLUTION NOTES:

1. EROSION AND SEDIMENT CONTROL INDICATED ON THESE PLANS ARE INTENDED AS PRELIMINARY BEST MANAGEMENT PRACTICE (BMP) MEASURES FOR ANTICIPATED SITE CONDITIONS.

2. THESE PRELIMINARY BMP MEASURES TO CONTROL EROSION, SEDIMENT, AND OTHER POLLUTANTS SHALL BE IN–PLACE PRIOR TO CLEARING, CONSTRUCTION, DEMOLITION, EXCAVATION, AND CONSTRUCTION OPERATIONS. THESE BMP MEASURES SHALL BE PROPERLY CONSTRUCTION AND MAINTAINED THROUGHOUT THE CONSTRUCTION PERIOD AND SHALL BE ADJUSTED AND UPDATED FOR THE METHOD(S) OF CONSTRUCTION PREFERRED BY THE CONTRACTOR FOR EACH PHASEOF CONSTRUCTION.

3. THESE PRELIMINARY BMP MEASURES SHALL BE INCIDENTAL TO THE WORK AND INCLUDED WITHIN THE CONTRACTOR'S BID.

4. THE CONTRACTOR SHALL BE RESPONSIBLE FOR DEVELOPING AND OBTAINING APPROVAL OF SITE–SPECIFIC CONSTRUCTION BEST MANAGEMENT PRACTICE PLAN (SSCBMPP) IN CONFORMANCE WITH THE APPLICABLE PROVISIONS OF THE WATER QUALITY AND WATER POLLUTION CONTROL STANDARDS CONTAINED IN HAWAII AND TITLE 11, CHAPTER 55, "WATER POLLUTION CONTROL", AS WELL AS THE GUIDELINES IN THE STATE OF HAWAII'S "CONSTRUCTION BEST MANAGEMENT PRACTICES FIELD MANUAL" AND "CITY AND COUNTY OF HONOLULU STORM WATER BEST MANAGEMENT PRACTICE MANUAL CONSTRUCTION, FINAL", DATED JANUARY 2008 AND NOVEMBER 2011, RESPECTIVELY, IN DEVELOPING, INSTALLING AND MAINTAINING THE BEST MANAGEMENT PRACTICES (BMP) FOR THE PROJECT. SSCBMPP SHALL BE SUBMITTED TO THE OWNER/ENGINEER FOR REVIEW AND APPROVAL.

5. THE CONTRACTOR SHALL FOLLOW THE GUIDELINES IN THE HONOLULU'S CITY & COUNTY "RULES RELATING TO SOIL EROSION STANDARDS AND GUIDELINES" ALONG WITH APPLICABLE SOIL EROSION GUIDELINES FOR THE PROJECT.

6. THE CONTRACTOR SHALL CONSIDER AND INSTALL BMP MEASURES WHICH TAKE INTO ACCOUNT HIGH INTENSITY AND PROLONGED RAINFALL, AND TO ADDRESS THE POTENTIAL PROBLEMS THAT MAY RESULT. INSPECT MONTHLY AND AFTER EACH RAINFALL.

7. THE CONTRACTOR SHALL BE RESPONSIBLE FOR ALL DAMAGES AND/OR INJURIES RESULTING FROM HIS/HER BMP'S.

8. THE CONTRACTOR SHALL DESIGNATE AT LEAST ONE (1) PERSON WHO WILL BE RESPONSIBLE FOR INSPECTIONS, MAINTENANCE, AND REPAIR ACTIVITIES. PERSONNEL SELECTED FOR THE INSPECTION AND MAINTENANCE RESPONSIBILITIES SHALL RECEIVE TRAINING FROM THE CONTRACTOR AT THE CONTRACTOR'S EXPENSE. TRAINING SHALL INCLUDE INSPECTION AND MAINTENANCE PRACTICES NECESSARY FOR MINIMIZING EROSION AND SEDIMENT AND FOR RETAINING SEDIMENT ON–SITE.

9. THE ENGINEER WILL DEDUCT THE COST FROM THE PROGRESS PAYMENT FOR ALL CITATIONS RECEIVED THE DEPARTMENT FOR NON–COMPLIANCE, OR THE CONTRACTOR SHALL REIMBURSE THE HAWAII DEPARTMENT OF DEFENSE (DOD) FOR THE FULL AMOUNT OF THE OUTSTANDING COST INCURRED BY THE STATE.

10. BMP SHALL BE EMPLOYED AT ALL TIMES DURING CONSTRUCTION AND POST–CONSTRUCTION. SSCBMPP SHALL BE REFERRED TO FREQUENTLY AND AMENDED BY THE CONTRACTOR AS CHANGES OCCUR IN CONSTRUCTION OPERATIONS THAT COULD HAVE POTENTIAL FOR DISCHARGE OF POLLUTANTS.

11. THE CONTRACTOR SHALL PROVIDE SSCBMPP THAT INCLUDES AT LEAST THE FOLLOWING:

    a. ALL CONTROL MEASURES SHALL BE CHECKED AND REPAIRED DAILY.
    b. STORM WATER RUNOFF FLOWING TOWARD THE CONSTRUCTION AREA SHALL BE DIVERTED BY USING APPROPRIATE CONTROL MEASURES, AS PRACTICAL.
    c. PLACE TEMPORARY COMPOST FILTER SOCK/SILT FENCE BARRIER DOWNHILL FROM THE CONSTRUCTION SITE TO INTERCEPT AND SLOW FLOW FROM THE DISTURBED SITE AREA.
    d. CONSTRUCTION SHALL BE SEQUENCED TO MINIMIZE THE EXPOSURE TIME OF CLEARED SURFACE AREA.
    e. DISTURBED ACTIVE AND INACTIVE CONSTRUCTION AREAS (INACTIVE CONSTRUCTION AREAS MAY BE DEFINED AS AREAS IN WHICH NO CONSTRUCTION ACTIVITY WILL OCCUR FOR A PERIOD OF 30 DAYS OR LONGER) SHOULD BE STABILIZED AS SOON AS PRACTICAL. IF CONSTRUCTION, CLIMATOLOGICAL, OR OTHER SITE CONDITIONS DO NOT ALLOW STABILIZATION, THE BMPS PLAN SHOULD DEFINE ALTERNATIVE APPROACHES.

9. THE CONTRACTOR SHALL PREVENT DUST, RESULTING FROM HIS/HER WORK, FROM BECOMING AIRBORNE AT ALL TIMES, INCLUDING NON–WORKING HOURS, WEEKENDS AND HOLIDAYS, IN CONFORMANCE WITH THE STATE DEPARTMENT OF HEALTH ADMINISTRATIVE RULES, TITLE 11, CHAPTER 60 – AIR POLLUTION CONTROL.

10. FOR THE PREVENTION OF SEDIMENT TRACKING OFFSITE, THE CONTRACTOR SHALL ENSURE THAT ALL TIRES OF CONSTRUCTION VEHICLES ARE SUFFICIENTLY CLEANED OFF SO THAT DIRT OR DEBRIS IS NOT TRACKED OF THE CONSTRUCTION SITE. THE CONTRACTOR SHALL ENSURE THAT EXISTING ROADWAYS USED TO ACCESS THE STAGING AREA ARE CLEAR OF ALL DEBRIS, TRASH, DIRT, MUD, ETC., THROUGHOUT THE CONSTRUCTION PERIOD. FOR CLEANING STREETS IN CONSTRUCTION AREAS, PERFORM THE FOLLOWING:

    a. DRY SWEEP AND MINIMIZE TRACKING OF MUD, THEN WASH STREET WITH WATER, FILTER ALL WATER PRIOR TO DISCHARGING OFFSITE.
    b. USE SEDIMENT TRAP, GRAVEL FILTERS, AND/OR SIMILAR POLLUTANT REDUCTION TECHNIQUES WITH FLUSHING PAVEMENT.
    c. USE STABILIZED CONSTRUCTION ENTRANCE/EXIT TO PREVENT SEDIMENT TRACKED OFF–SITE BY CONSTRUCTION VEHICLES.
    d. REMOVAL OF ANY TREES WITHIN THE PROJECT SITE SHALL BE COORDINATED WITH AND ACCEPTED BY THE ENGINEER.
    e. PRESERVE TREES, SHRUBS, PLANTS, AND OTHER OBJECTS TO WITHIN THE ESTABLISHED LIMITS.
    f. PROTECT REMAINING TREES AND SHRUBBERY FROM INJURY OR DAMAGES.
    g. COMPOST FILTER SOCK LOCATIONS ARE SCHEMATIC AND SUBJECT TO CHANGE IN THE FIELD.
    h. COMPOST FILTER SOCK SHALL NOT CONTAIN BIOSOLIDS AND SHALL BE CONSISTENT WITH EPA GUIDELINES. THE CONTRACTOR SHALL SUBMIT MATERIAL SPECIFICATIONS OF THE COMPOST FILTER SOCK FOR ENGINEER'S APPROVAL BEFORE INSTALLATION.
    i. DESIGNATE ALL COMBINATION OR SINGLE PURPOSE ENTRANCES AND EXITS TO THE CONSTRUCTION SITE.
    j. REQUIRE ALL EMPLOYEES, SUBCONTRACTORS, AND SUPPLIES TO UTILIZE THE STABILIZED CONSTRUCTION ACCESS.
    k. REMOVE ALL SEDIMENT DEPOSITED ON PAVED ROADWAYS WITHIN 24 HOURS.
    l. REMOVE GRAVEL AND FILTER FABRIC AT COMPLETION OF CONSTRUCTION.

GRAPHIC SCALE

20' 0 20' 40'

SCALE: 1"=20'

REVISION NO.	SYM.	DESCRIPTION	SHT OF	DATE	APPROVED:

PERICLES M. MANTHOS
LICENSED PROFESSIONAL ENGINEER
No. 7833–C
HAWAII, U.S.A.

License Expiration Date 04–30–18

THIS WORK WAS PREPARED BY ME OR UNDER MY SUPERVISION AND CONSTRUCTION OF THIS PROJECT WILL BE UNDER MY OBSERVATION AS DEFINED IN HAR TITLE 16, CHAPTER 115, RULES OF THE BOARD OF PROFESSIONAL ENGINEERS, ARCHITECTS AND SURVEYORS, STATE OF HAWAII

Signature 01–23–18 Date

DEPARTMENT OF DEFENSE
STATE OF HAWAII

REPAIR AND RESURFACE ACCESS ROAD AND PARKING LOT, BIRKHIMER EOC
HONOLULU, OAHU, HAWAII

EROSION CONTROL NOTES

MANTHOS ENGINEERING, LLC

DESIGNED BY: KM	CHECKED BY: MO	JOB NO. CA–1325–C	DRAWING NO. EC-1
DRAWN BY: KM	APPROVED BY: PM	DATE JAN, 2018	SHEET 22 OF 28 SHEETS
SCALE:			

\\MF-FILESVR\Company\Projects - Civil Design\DOD Birkhimer Parking Lot and Access Road\Additional Work\100%RL_Submittal\SHT 21-23_Birkhimer5 ECP-RL.dwg, 1/23/2018 11:46:22 AM, DWG To PDF.pc3

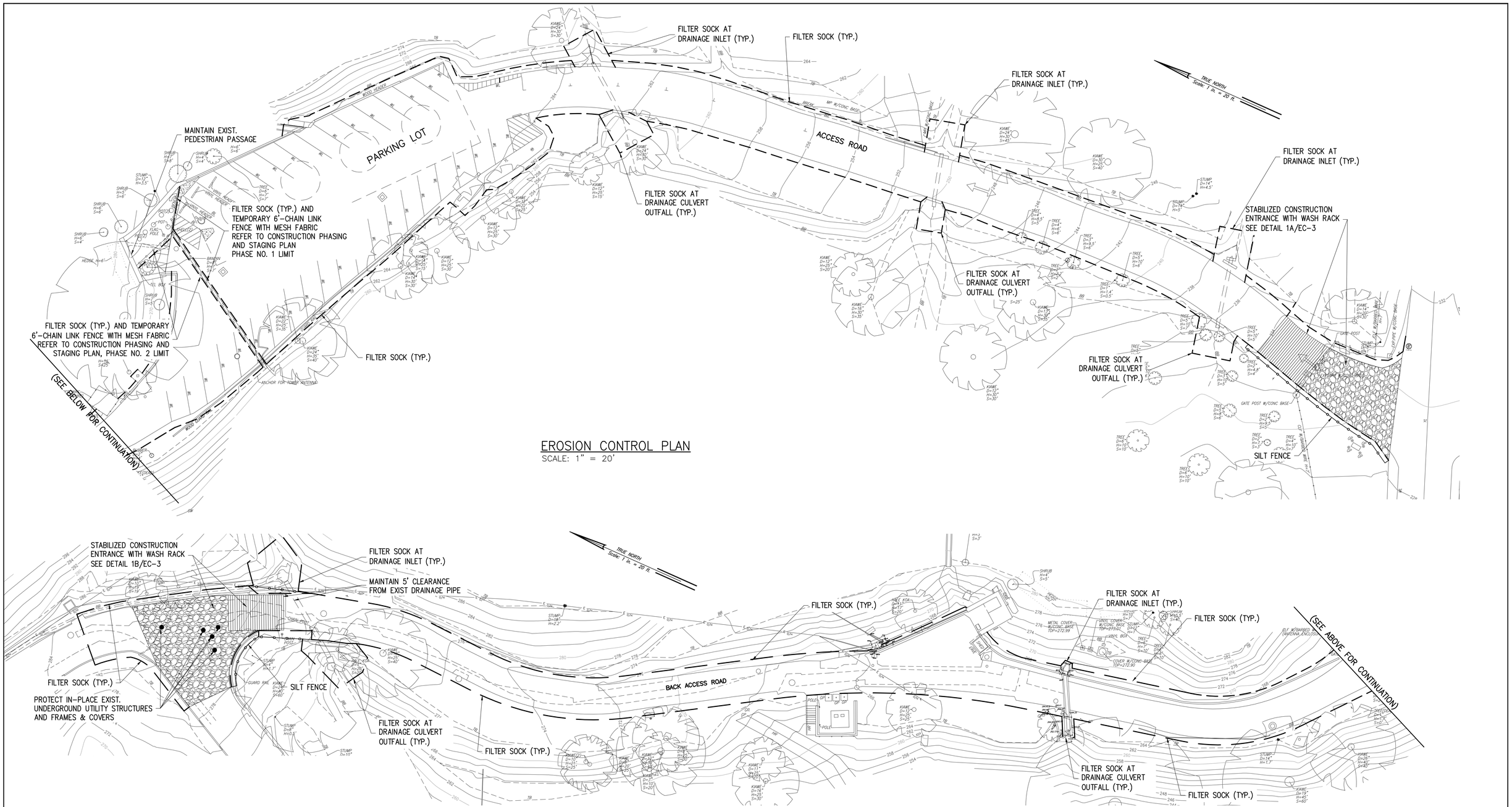

EROSION CONTROL PLAN

SCALE: 1" = 20'

NOTES:

1. THIS EROSION CONTROL AND TRAFFIC CONTROL PLAN IS FOR ESTIMATING PURPOSE ONLY. CONTRACTOR SHALL SUBMIT BMP PLAN WITH A CONSTRUCTION SCHEDULE.
2. CONTRACTOR SHALL LOCATE EXIST. UNDERGROUND UTILITIES SHALL BE SURVEYED AND PROVIDED IN A UTILITY LOCATION REPORT THAT INCLUDES HORIZONTAL AND VERTICAL LOCATIONS FOR ENGINEER'S REVIEW PRIOR TO CONSTRUCTION.

LEGEND:

FILTER SOCK, SEE DETAIL 2/EC-3

SILT FENCE, SEE DETAIL 3/EC-3

GRAPHIC SCALE

20' 0 20' 40'

SCALE: 1"=20'

REVISION NO.	SYM.	DESCRIPTION	SHT OF	DATE	APPROVED:

PERICLES M. MANTHOS
LICENSED PROFESSIONAL ENGINEER
No. 7833-C
HAWAII, U.S.A.

License Expiration Date 04-30-18

THIS WORK WAS PREPARED BY ME OR UNDER MY SUPERVISION AND CONSTRUCTION OF THIS PROJECT WILL BE UNDER MY OBSERVATION AS DEFINED IN HAR TITLE 16, CHAPTER 115, RULES OF THE BOARD OF PROFESSIONAL ENGINEERS, ARCHITECTS AND SURVEYORS, STATE OF HAWAII

Signature 01-23-18 Date

DEPARTMENT OF DEFENSE
STATE OF HAWAII

REPAIR AND RESURFACE ACCESS ROAD AND PARKING LOT, BIRKHIMER EOC
HONOLULU, OAHU, HAWAII

EROSION CONTROL PLAN

MANTHOS ENGINEERING, LLC		JOB NO.	DRAWING NO.
DESIGNED BY: KM	CHECKED BY: MO	CA-1325-C	EC-2
DRAWN BY: KM	APPROVED BY: PM	DATE JAN, 2018	SHEET 23 OF 28 SHEETS
SCALE:			

\\MF-FILES\PR\Company\Projects - Civil Design\DOD Birkhimer Parking Lot and Access Road\Additional Work\1009-R1_Submittal\SHT 21-23_Birkhimer-5-EOP-R1.dwg 1/23/2018 11:48:46 AM, DWG To PDF.pc3

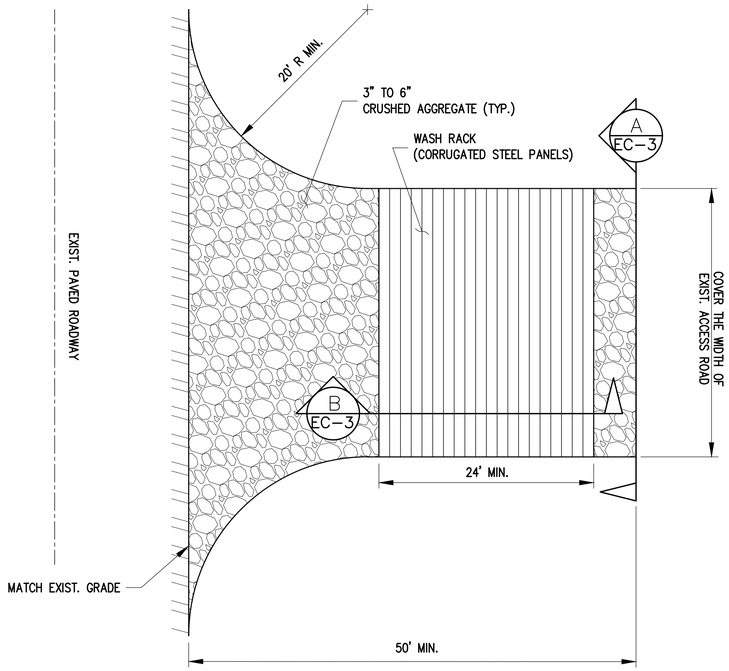

1A EC-3 STABILIZED CONSTRUCTION ENTRANCE FOR ACCESS ROAD WITH WASH RACK DETAIL
SCALE: NTS

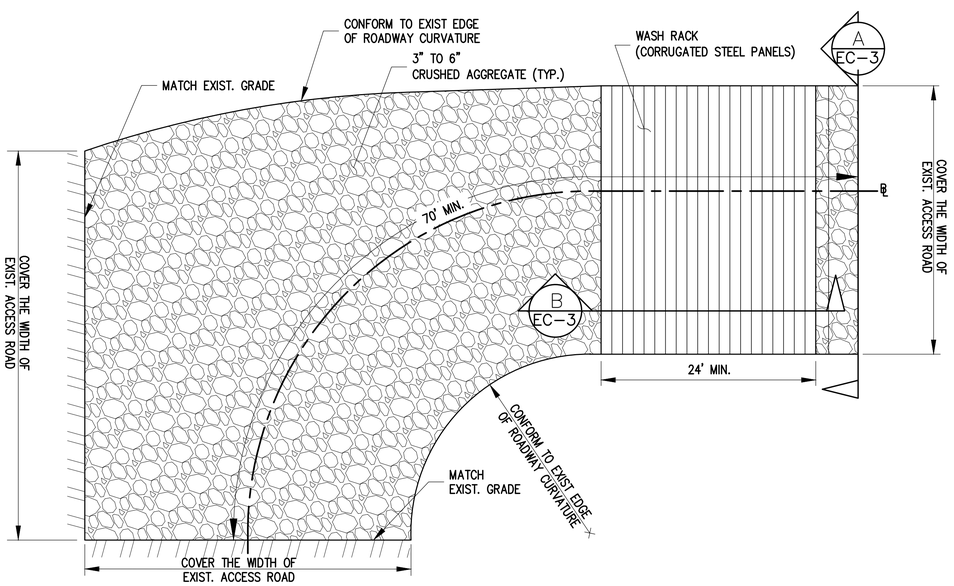

1B EC-3 STABILIZED CONSTRUCTION ENTRANCE FOR BACK ACCESS ROAD WITH WASH RACK DETAIL
SCALE: NTS

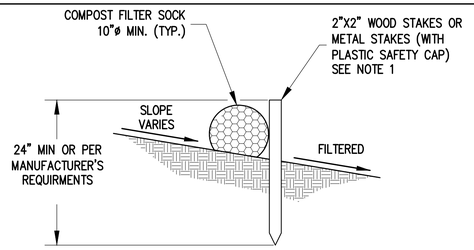

NOTES:
1. BIND ROLL AT EACH END AND EVERY 4 FT. ALONG LENGTH OF ROLL WITH JUTE-TYPE TWINE.

C EC-3 SECTION C – C
SCALE: NTS

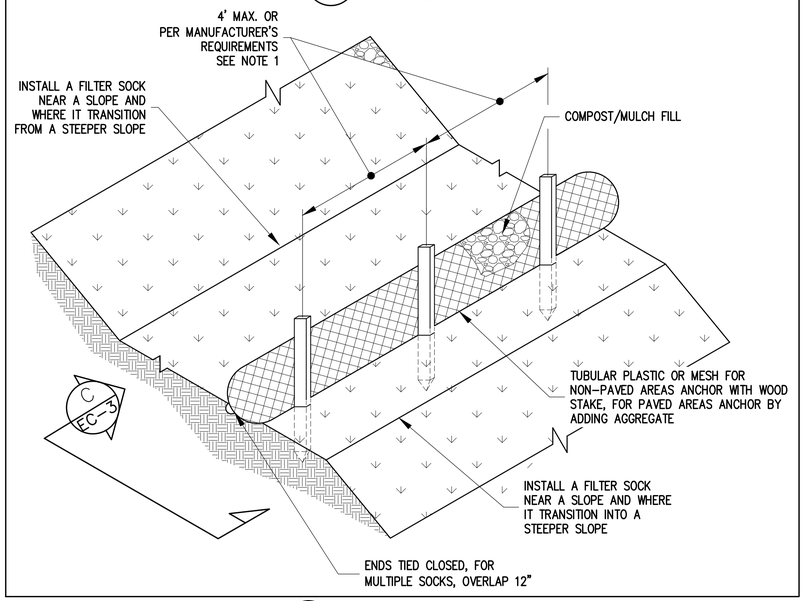

2 EC-3 FILTER SOCK DETAIL
SCALE: NTS

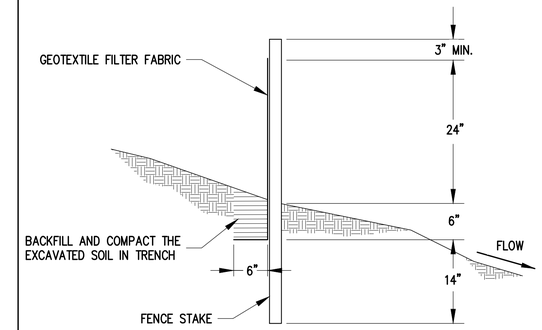

NOTES:
1. THE FILTER FABRIC SHALL BE A MINIMUM OF 36 INCHES WIDE.
2. IF SILT FENCE IS OBTAINED FROM MANUFACTURER AS A PACKAGE (I.E. FABRIC ATTACHED TO POST) THE MANUFACTURER'S INSTALLATION INSTRUCTION SHALL BE ADHERED TO.
3. FENCE STAKES MAY BE WOOD OR METAL, MUST BE CAPABLE OF SUPPORTING ANTICIPATED LOADS.

D EC-3 SECTION D – D
SCALE: NTS

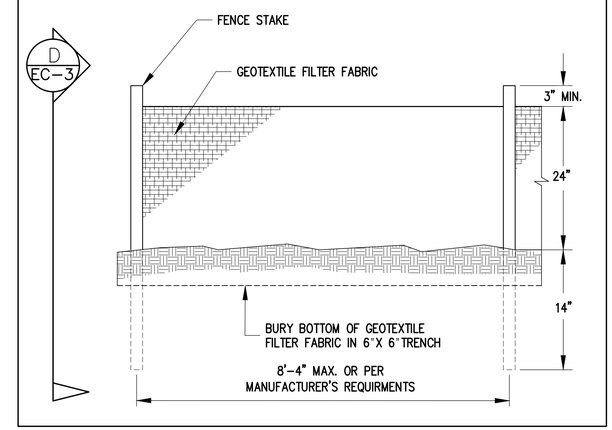

3 EC-3 SILT FENCE DETAIL
SCALE: NTS

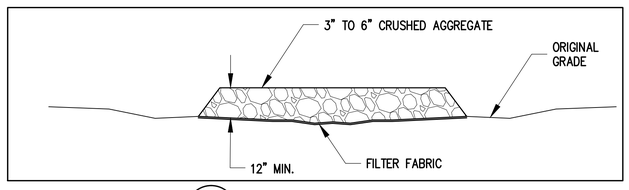

A EC-3 SECTION A – A
SCALE: NTS

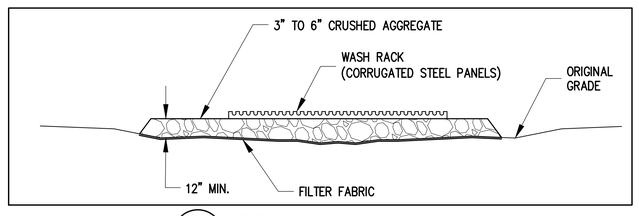

B EC-3 SECTION B – B
SCALE: NTS

REVISION NO.	SYM.	DESCRIPTION	SHT OF	DATE	APPROVED:

PERICLES M. MANTHOS
LICENSED PROFESSIONAL ENGINEER
No. 7833-C
HAWAII, U.S.A.

License Expiration Date 04-30-18

THIS WORK WAS PREPARED BY ME OR UNDER MY SUPERVISION AND CONSTRUCTION OF THIS PROJECT WILL BE UNDER MY OBSERVATION AS DEFINED IN HAR TITLE 16, CHAPTER 115, RULES OF THE BOARD OF PROFESSIONAL ENGINEERS, ARCHITECTS AND SURVEYORS, STATE OF HAWAII

Signature 01-23-18 Date

DEPARTMENT OF DEFENSE
STATE OF HAWAII

REPAIR AND RESURFACE ACCESS ROAD AND PARKING LOT,
BIRKHIMER EOC
HONOLULU, OAHU, HAWAII

EROSION CONTROL DETAILS

MANTHOS ENGINEERING, LLC		JOB NO.	DRAWING NO.
DESIGNED BY: KM	CHECKED BY: MO	CA-1325-C	EC-3
DRAWN BY: KM	APPROVED BY: PM	DATE JAN, 2018	SHEET 24 OF 28 SHEETS
SCALE:			

\\ME-FILES\PW\Company\Projects - Civil Design\DOD Birkhimer Parking Lot and Access Road\Additional Work\100%RL_Submittal\SHT 21-23_Birkhimer5-EC0-R1.dwg, 1/23/2018 3:16:39 PM, DWG To PDF.pc3

TRAFFIC CONTROL NOTES:

1. THE CONTRACTOR SHALL MAKE MINOR ADJUSTMENTS AT INTERSECTIONS, DRIVEWAYS, BRIDGES, STRUCTURES, ETC., TO FIT FIELD CONDITIONS.
2. CONES OR DELINEATORS SHALL BE EXTENDED TO A POINT WHERE THEY ARE VISIBLE TO APPROACHING TRAFFIC.
3. TRAFFIC CONTROL DEVICES SHALL BE INSTALLED SUCH THAT THE SIGN OR DEVICE FARTHEST FROM THE WORK AREA SHALL BE PLACED FIRST. THE OTHERS SHALL THEN BE PLACED PROGRESSIVELY TOWARD THE WORK AREA.
4. REGULATORY AND WARNING SIGNS WITHIN THE CONSTRUCTION ZONE THAT ARE IN CONFLICT WITH THE TRAFFIC CONTROL PLANS SHALL BE REMOVED AND COVERED. ALL SIGNS SHALL BE RESTORED UPON COMPLETION OF WORK.
5. POST FLAGGERS AT BOTH ENDS OF THE KAHALA TUNNEL AND AT DIAMOND HEAD ROAD. FLAGGERS SHALL BE IN DIRECT COMMUNICATIONS AT ALL TIMES.
6. SIGN SPACINGS (D), TAPER LENGTHS (T) AND SPACINGS OF CONES OR DELINEATORS SHALL BE SHOWN ON THE TRAFFIC CONTROL PLANS.
7. ALL TRAFFIC LANES SHALL BE MINIMUM OF 10 FEET WIDE.
8. ALL CONSTRUCTION WARNING SIGNS SHALL BE PROMPTLY REMOVED OR COVERED WHENEVER THE MESSAGE IS NOT APPLICABLE OR NOT IN USE.
9. THE BACKS OF ALL SIGNS USED FOR TRAFFIC CONTROL SHALL BE APPROPRIATELY COVERED TO PRECLUDE THE DISPLAY OF INAPPLICABLE SIGN MESSAGES (I.E., WHEN SIGNS HAVE MESSAGES ON BOTH FACES).
10. AT THE END OF EACH DAY'S WORK, OR AS SOON AS THE WORK IS COMPLETED, THE PERMITTEE SHALL REMOVE ALL TRAFFIC CONTROL DEVICES NO LONGER NEEDED TO PERMIT FREE AND SAFE PASSAGE OF PUBLIC TRAFFIC. REMOVAL SHALL BE IN THE REVERSE ORDER OF INSTALLATION.
11. REPLACE EXISTING FADED OR OBLITERATED PAVEMENT MARKINGS THAT ARE NECESSARY FOR SAFE TRAFFIC FLOW IN THE CONSTRUCTION AREA WITH TEMPORARY OR PERMANENT MARKINGS BEFORE OPENING THE ROADWAY TO PUBLIC TRAFFIC EACH DAY.
12. ALL WORK ZONE TRAFFIC CONTROL DEVICES SHALL COMPLY WITH THE "STATEWIDE GUIDELINE FOR WORK ZONE TRAFFIC CONTROL DEVICES", DATED SEPTEMBER 13, 2000, AND THE CURRENT U.S. FEDERAL HIGHWAY ADMINISTRATION'S "MANUAL ON UNIFORM TRAFFIC CONTROL DEVICES (MUTCD) FOR STREETS AND HIGHWAYS", PART VI – TRAFFIC CONTROLS DEVICE FOR LOW–VOLUME ROADS.
13. WHERE PEDESTRIAN WALKWAYS EXIST, THEY SHALL BE MAINTAIN IN PASSAGE CONDITION OR OTHER FACILITIES FOR PEDESTRIANS SHALL BE PROVIDED. PASSAGE BETWEEN WALKWAYS AT INTERSECTIONS SHALL LIKEWISE BE PROVIDED.
14. STATIONARY CONSTRUCTION LASTING THREE (3) DAYS OR LONGER THROUGHOUT THE PROJECT CORRIDOR SHALL REQUIRE LONG–TERM CONSTRUCTION WARNING SIGNS AND REGULATORY SPEED LIMIT SIGNS, SEE THE HDOT WORK ZONE SIGNING PLAN, NOTES AND DETAILS.
15. CONTRACTOR SHALL SUBMIT A TRAFFIC CONTROL PLAN FOR THE USE OF THE KAHALA TUNNEL TO THE ENGINEER FOR APPROVAL. THE PLAN SHALL INCLUDE BUT NOT LIMITED TO THE DATES AND TIMES FOR HAULING OPERATIONS, AND HAULING FREQUENCY AND DURATION. PEDESTRIAN TRAFFIC SHALL NOT BE PERMITTED WHEN HAULING TRUCKS AND EQUIPMENT ARE TRAVERSING THE KAHALA TUNNEL.

NOTES:

THIS TRAFFIC CONTROL PLAN IS FOR ESTIMATING PURPOSE ONLY. CONTRACTOR SHALL SUBMIT TRAFFIC CONTROL PLAN WITH A CONSTRUCTION SCHEDULE.

LEGEND:

←	DIRECTION OF TRAFFIC
	FLAGMAN WITH WALKIE TALKIE AS REQUIRED
	TEMPORARY TRAFFIC CONTROL SIGN

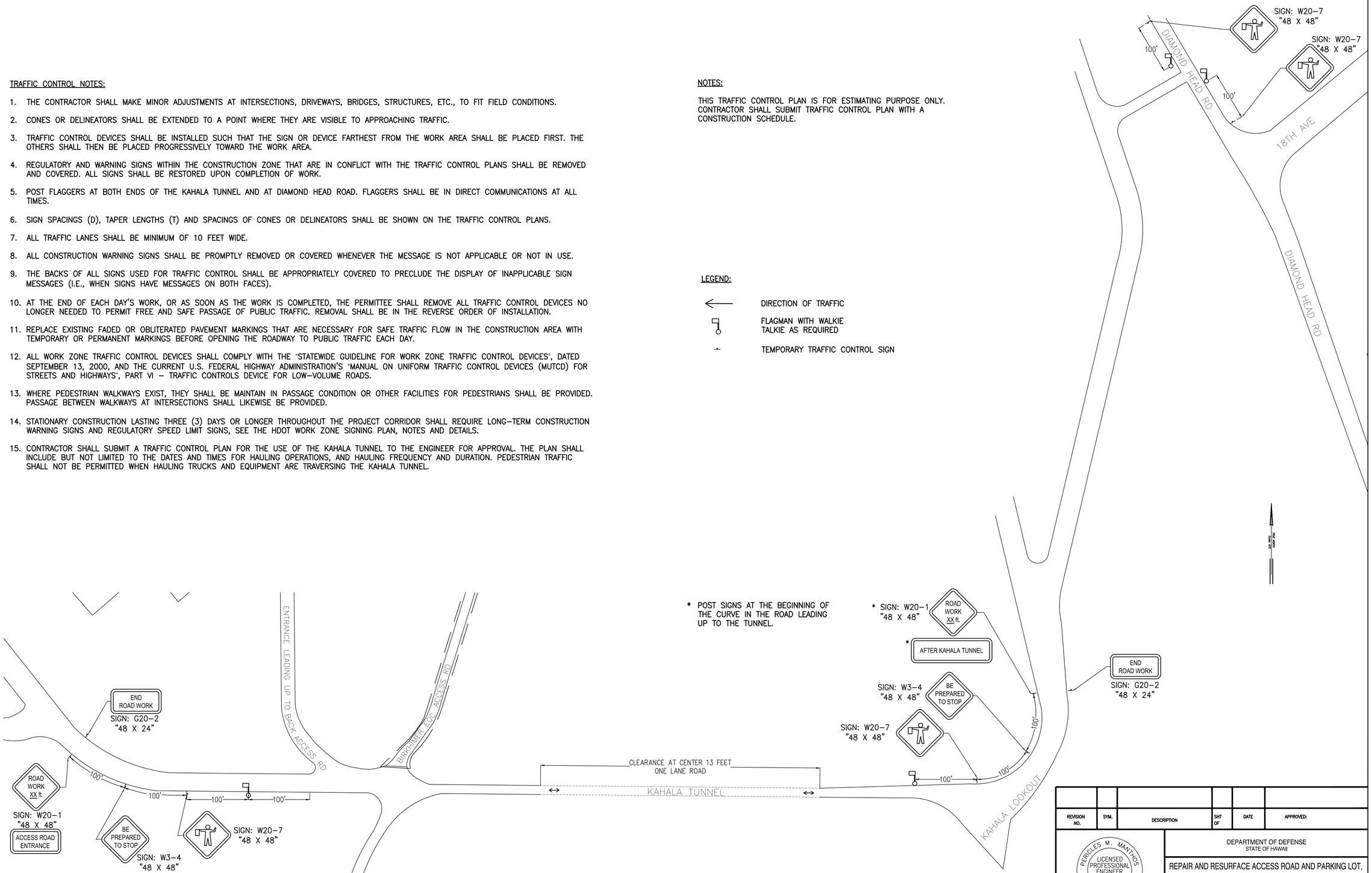

TRAFFIC CONTROL PLAN

SCALE: NTS

REVISION NO.	SYM.	DESCRIPTION	SHT OF	DATE	APPROVED:

PERICLES M. MANTHOS
LICENSED PROFESSIONAL ENGINEER
No. 7833–C
HAWAII, U.S.A.

License Expiration Date 04–30–18

THIS WORK WAS PREPARED BY ME OR UNDER MY SUPERVISION AND CONSTRUCTION OF THIS PROJECT WILL BE UNDER MY OBSERVATION AS DEFINED IN HAR TITLE 16, CHAPTER 115, RULES OF THE BOARD OF PROFESSIONAL ENGINEERS, ARCHITECTS AND SURVEYORS, STATE OF HAWAII

Signature 01–23–18 Date

DEPARTMENT OF DEFENSE
STATE OF HAWAII

REPAIR AND RESURFACE ACCESS ROAD AND PARKING LOT, BIRKHIMER EOC
HONOLULU, OAHU, HAWAII

TRAFFIC CONTROL PLAN

MANTHOS ENGINEERING, LLC

DESIGNED BY: KM	CHECKED BY: MO	JOB NO. CA–1325–C	DRAWING NO. TC-1
DRAWN BY: KM	APPROVED BY: PM	DATE JAN, 2018	SHEET 25 OF 28 SHEETS
SCALE:			

\\ME-FILES\PM\Company\Projects - Civil Design\DOD Birkhimer Parking Lot and Access Road\Additional Work\100%\KL_Submittals\SHT 24_Birkhimer5_TCP-R1.dwg, 1/23/2018 4:05:55 PM, DWG To PDF.pc3

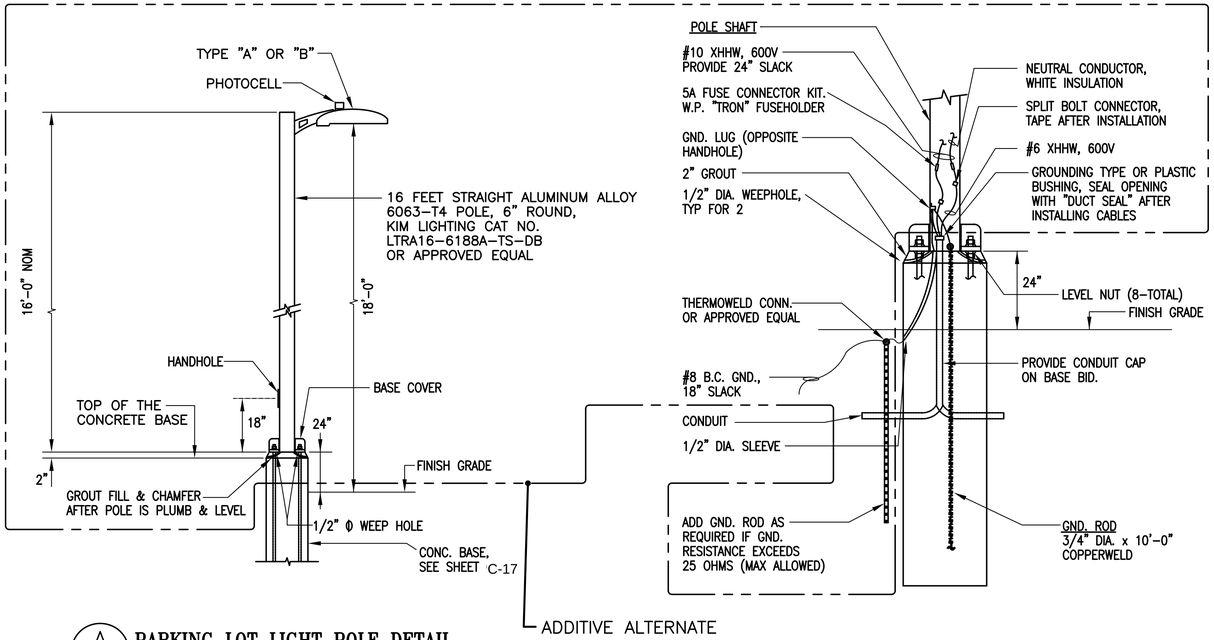

A / E-1 **PARKING LOT LIGHT POLE DETAIL**
NOT TO SCALE

B / E-1 **PARKING LOT LIGHT POLE BASE ELEVATION**
NOT TO SCALE

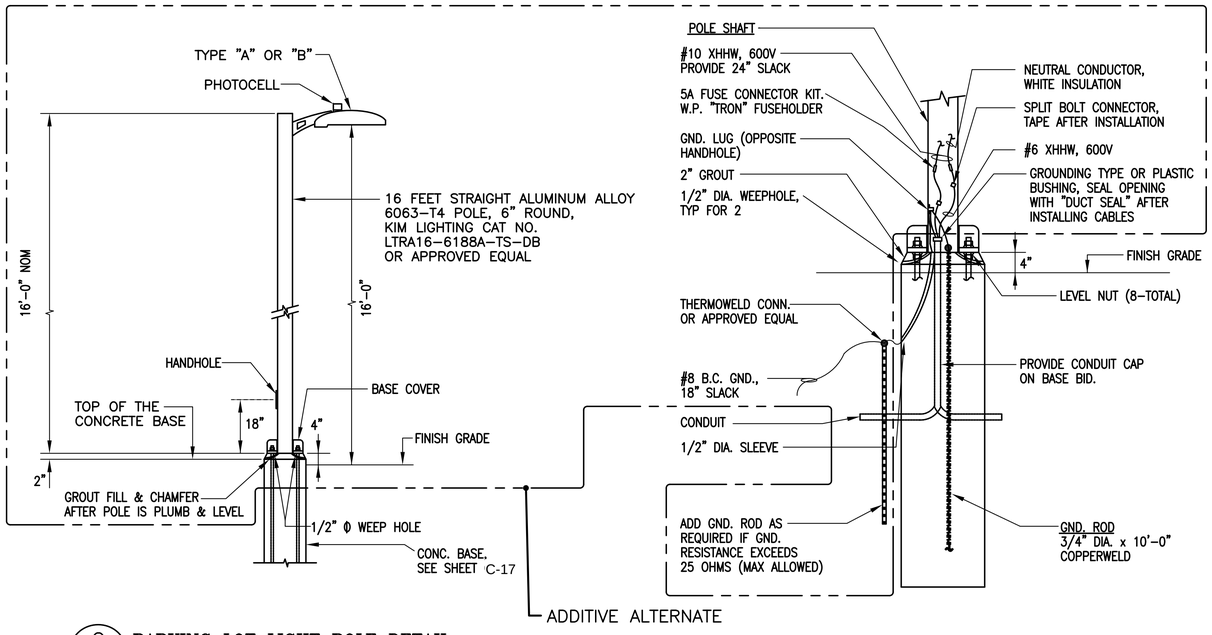

C / E-1 **PARKING LOT LIGHT POLE DETAIL**
NOT TO SCALE

D / E-1 **PARKING LOT LIGHT POLE BASE ELEVATION**
NOT TO SCALE

ELECTRICAL SYMBOLS

- EXISTING PANELBOARD
- PARKING LOT LIGHT
- COMMUNICATION HANDHOLE
- JUNCTION BOX, CEILING, LARGE
- LUMINAIRE DESIGNATION, TYPE "A" INDICATED
- WIRING IN EXPOSED RACEWAY
- WIRING IN RACEWAY CONCEALED IN FLOOR OR BELOW GRADE

NOTES:

1. ANY CIRCUIT WITH NO FURTHER DESIGNATION INDICATES A TWO WIRE CIRCUIT. CIRCUITS WITH ADDITIONAL WIRES ARE INDICATED AS FOLLOWS: —//—, 3 WIRES: —///—, 4 WIRES, ETC.
2. GROUND WIRE PER NATIONAL ELECTRICAL CODE INDICATED AS FOLLOWS; —←—.
3. ALL EXPOSED CONDUIT AND BOXES SHALL BE PAINTED TO MATCH ADJACENT WALL OR CEILING SURROUNDING.
4. ALL EXPOSE CONDUITS UNDER 10 FEET SHALL BE RIGID STEEL CONDUIT. ABOVE 10 FEET, EMT CONDUIT IS ALLOWED TO USE.

LUMINAIRE SCHEDULE

TYPE	LAMP	DESCRIPTION
A	135W-LED	KIM LIGHTING ALT4P35-1204K-208DB-A31-DF-FGL OR APPROVED EQUAL
B	135W-LED	KIM LIGHTING ALT2P35-1204K-208DB-A31-DF-FGL OR APPROVED EQUAL

NOTE:

LIGHTING SHALL BE SHIELDED WITH FULL CUT-OFF FIXTURES TO ELIMINATE ILLUMINATION TO ANY ADJACENT AREA.

LIGHT POLE FOUNDATION DRILLED SHAFT SIZE AND EMBEDMENT, STEEL REINFORCEMENT, ANCHORING, POLE BASE AND GROUT PER LIGHT POLE FOUNDATION PLAN.

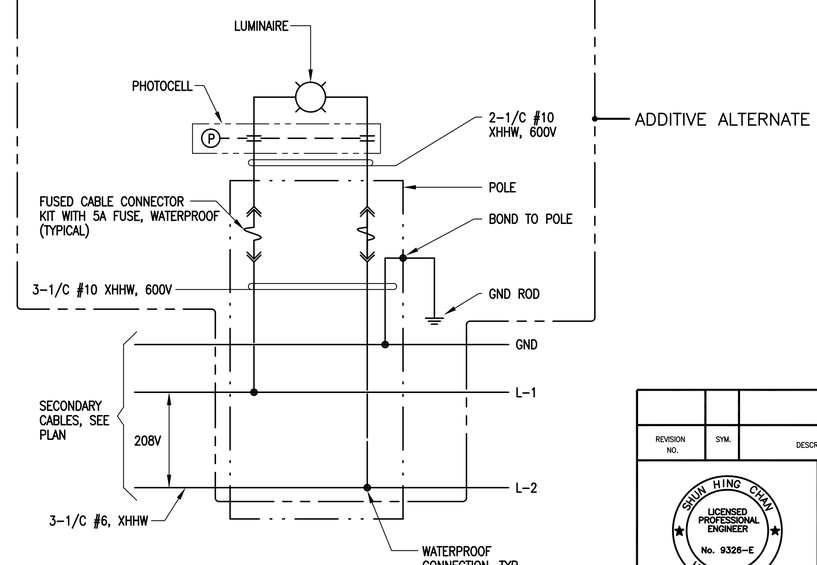

E / E-1 **TYPICAL PARKING LOT LIGHT LUMINAIRE CONNECTION DIAGRAM**
NOT TO SCALE

REVISION NO.	SYM.	DESCRIPTION	SHT OF	DATE	APPROVED:

SHUN HING CHAN LICENSED PROFESSIONAL ENGINEER No. 9326-E HAWAII U.S.A.

License Expiration Date 04-30-18

THIS WORK WAS PREPARED BY ME OR UNDER MY SUPERVISION AND CONSTRUCTION OF THIS PROJECT WILL BE UNDER MY OBSERVATION AS DEFINED IN HAR TITLE 16, CHAPTRT 115, RULES OF THE BOARD OF PROFESSIONAL ENGINEERS, ARCHITECTS AND SURVERYORS, STATE OF HAWAII

Signature: Shun Hing Chan — Date: 01-23-18

DEPARTMENT OF DEFENSE
STATE OF HAWAII

REPAIR AND RESURFACE ACCESS ROAD AND PARKING LOT, BIRKHIMER EOC
HONOLULU, OAHU, HAWAII

ELECTRICAL SYMBOLS, LUMINAIRE SCHEDULE
PARKING LOT LIGHT POLE DETAILS

MANTHOS ENGINEERING, LLC

DESIGNED BY: SHC	CHECKED BY: SHC	JOB NO. CA-1325-C	DRAWING NO. E-1
DRAWN BY: VC	APPROVED BY: SHC	DATE JAN, 2018	SHEET 26 OF 28 SHEETS
SCALE: AS NOTED			

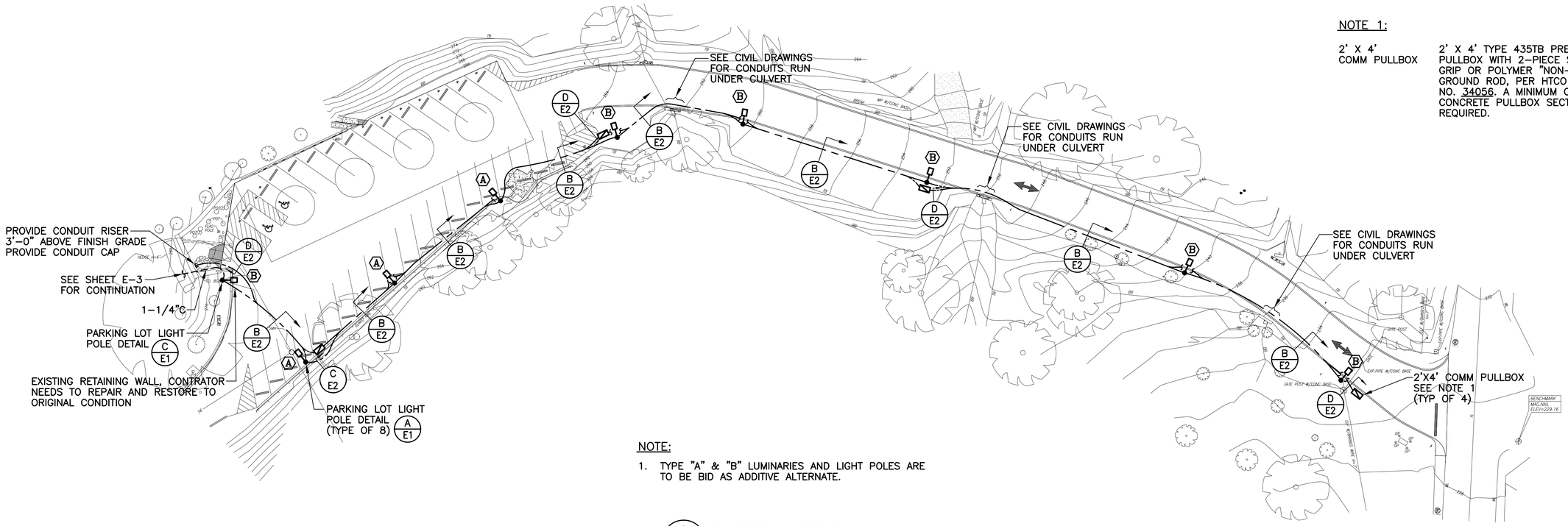

NOTE 1:

2' X 4' COMM PULLBOX — 2' X 4' TYPE 435TB PRECAST CONCRETE PULLBOX WITH 2-PIECE STEEL "SLIP-NOT" GRIP OR POLYMER "NON-SKID" COVERS, GROUND ROD, PER HTCO STANDARD DRAWING NO. 34056. A MINIMUM OF 2 PRECAST CONCRETE PULLBOX SECTIONS SHALL BE REQUIRED.

NOTE:

1. TYPE "A" & "B" LUMINARIES AND LIGHT POLES ARE TO BE BID AS ADDITIVE ALTERNATE.

A / E-2 **ELECTRICAL SITE PLAN**
SCALE: 1" = 20' - 0"

BACKFILL NOTES:

TYPE "A" BACKFILL - EARTH & GRAVEL. ROCK SIZE TO BE 1" MAX & THE MIXTURE TO CONTAIN NOT MORE THAN 50% BY VOLUME OF ROCK PACTICLES. 95% COMPACTION.

CONCRETE - 3" ENCASEMENT, 3000 PSI COMPRESSIVE STRENGTH @ 28 DAYS.

NOTE

1. WARNING TAPE SHALL BE COMPLIED TO POWER AND TELEPHONE COMPANY REQUIREMENT. CONTRACTOR SHALL COORDINATE WITH UTILITY COMPANY.

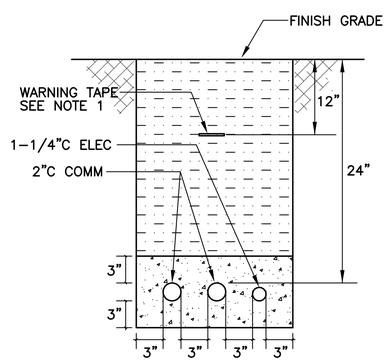

B / E-2 **DUCT SECTION**
NOT TO SCALE

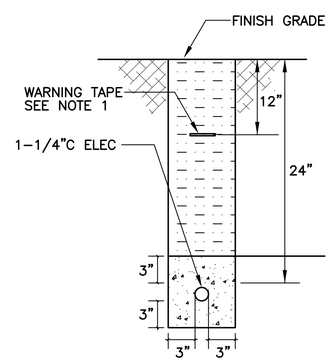

C / E-2 **DUCT SECTION**
NOT TO SCALE

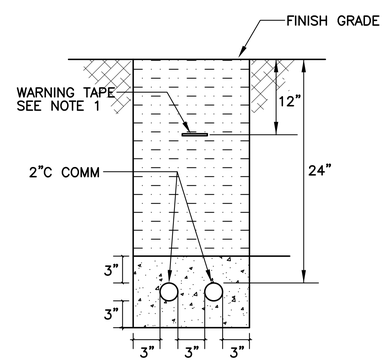

D / E-2 **DUCT SECTION**
NOT TO SCALE

REVISION NO.	SYM.	DESCRIPTION	SHT OF	DATE	APPROVED:

SHUN HING CHAN — LICENSED PROFESSIONAL ENGINEER — No. 9326-E — HAWAII U.S.A.

License Expiration Date 04-30-18

THIS WORK WAS PREPARED BY ME OR UNDER MY SUPERVISION AND CONSTRUCTION OF THIS PROJECT WILL BE UNDER MY OBSERVATION AS DEFINED IN HAR TITLE 16, CHAPTRT 115, RULES OF THE BOARD OF PROFESSIONAL ENGINEERS, ARCHITECTS AND SURVEYORS, STATE OF HAWAII

Signature — Date 01-23-18

DEPARTMENT OF DEFENSE
STATE OF HAWAII

REPAIR AND RESURFACE ACCESS ROAD AND PARKING LOT, BIRKHIMER EOC
HONOLULU, OAHU, HAWAII

ELECTRICAL SITE PLAN
DUCT SECTIONS

MANTHOS ENGINEERING, LLC		JOB NO.	DRAWING NO.
DESIGNED BY: SHC	CHECKED BY: SHC	CA-1325-C	E-2
DRAWN BY: VC	APPROVED BY: SHC	DATE JAN, 2018	SHEET 27 OF 28 SHEETS
SCALE: AS NOTED			

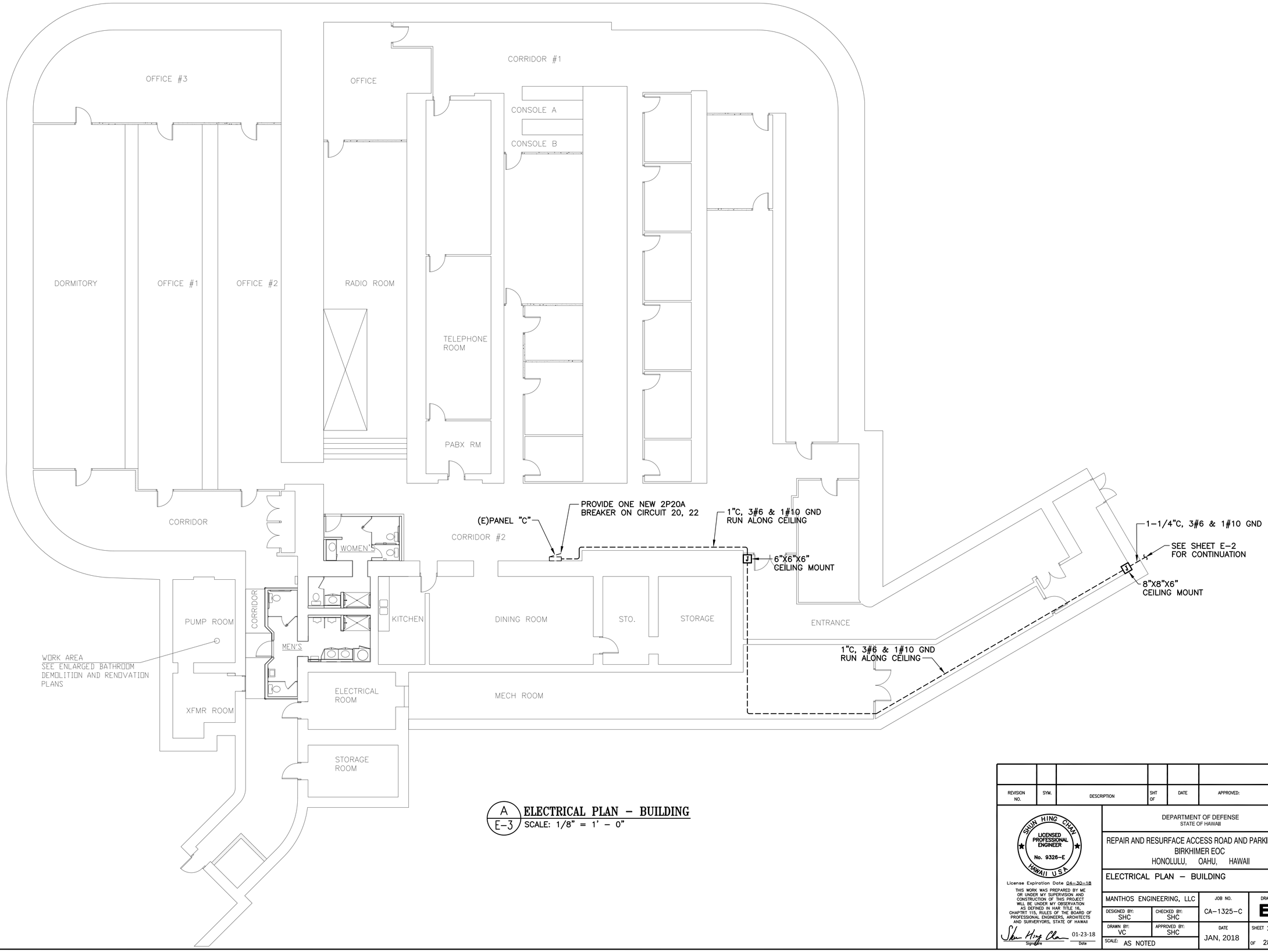

A / E-3 **ELECTRICAL PLAN – BUILDING**
SCALE: 1/8" = 1' – 0"

REVISION NO.	SYM.	DESCRIPTION	SHT OF	DATE	APPROVED:

SHUN HING CHAN
LICENSED PROFESSIONAL ENGINEER
No. 9326-E
HAWAII U.S.A.

License Expiration Date 04-30-18

THIS WORK WAS PREPARED BY ME OR UNDER MY SUPERVISION AND CONSTRUCTION OF THIS PROJECT WILL BE UNDER MY OBSERVATION AS DEFINED IN HAR TITLE 16, CHAPTRT 115, RULES OF THE BOARD OF PROFESSIONAL ENGINEERS, ARCHITECTS AND SURVEYORS, STATE OF HAWAII

Signature — Date 01-23-18

DEPARTMENT OF DEFENSE
STATE OF HAWAII

REPAIR AND RESURFACE ACCESS ROAD AND PARKING LOT, BIRKHIMER EOC
HONOLULU, OAHU, HAWAII

ELECTRICAL PLAN – BUILDING

MANTHOS ENGINEERING, LLC

DESIGNED BY: SHC	CHECKED BY: SHC	JOB NO. CA-1325-C	DRAWING NO. E-3
DRAWN BY: VC	APPROVED BY: SHC	DATE JAN, 2018	SHEET 28 OF 28 SHEETS
SCALE: AS NOTED			