HAWAII ARMY NATIONAL GUARD
ARMY AVIATION SUPPORT FACILITY
BUILDING 30
JOB NO: CA-1825-C

91-1391 SARATOGA AVENUE

KAPOLEI, HAWAII 96707

TMK: 9-1-013:045

PRIME CONSULTANT

OKAHARA AND ASSOCIATES, INC.
CIVIL AND MECHANICAL

SUB-CONSULTANTS

BOWERS + KUBOTA CONSULTING ARCHITECTS	**KAI HAWAII, INC.** STRUCTURAL	**RONALD N.S. HO & ASSOCIATES, INC.** ELECTRICAL
THE BENZING GROUP LLC ENVIRONMENTAL	**YOGI KWONG ENGINEERS LLC** GEOTECHNICAL	**CONTROLPOINT SURVEYING INC.** SURVEYING
J. UNO & ASSOCIATES, INC. COST ESTIMATING		

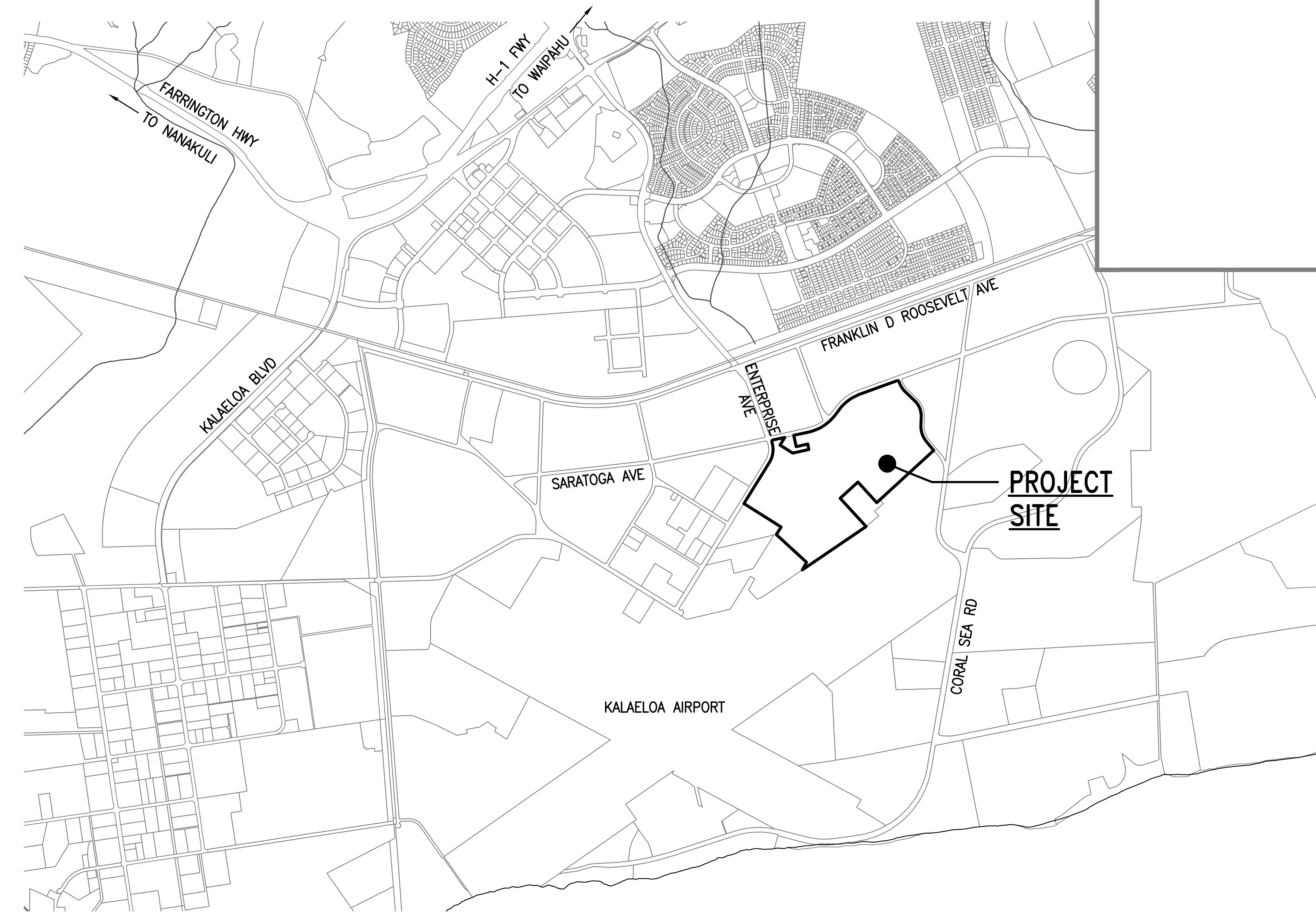

1 T-1.00 VICINITY MAP
NOT TO SCALE

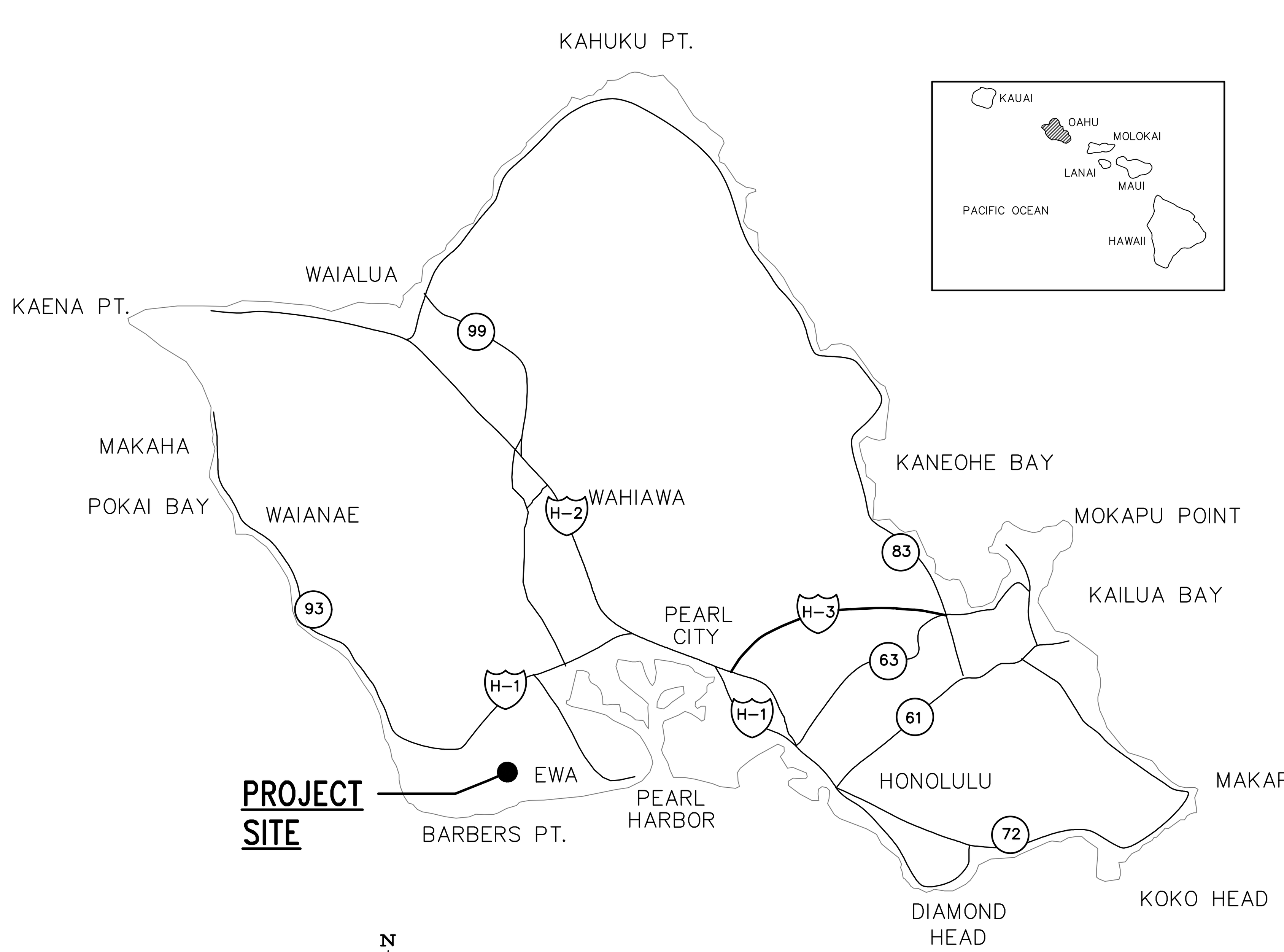

2 T-1.00 ISLAND MAP
NOT TO SCALE

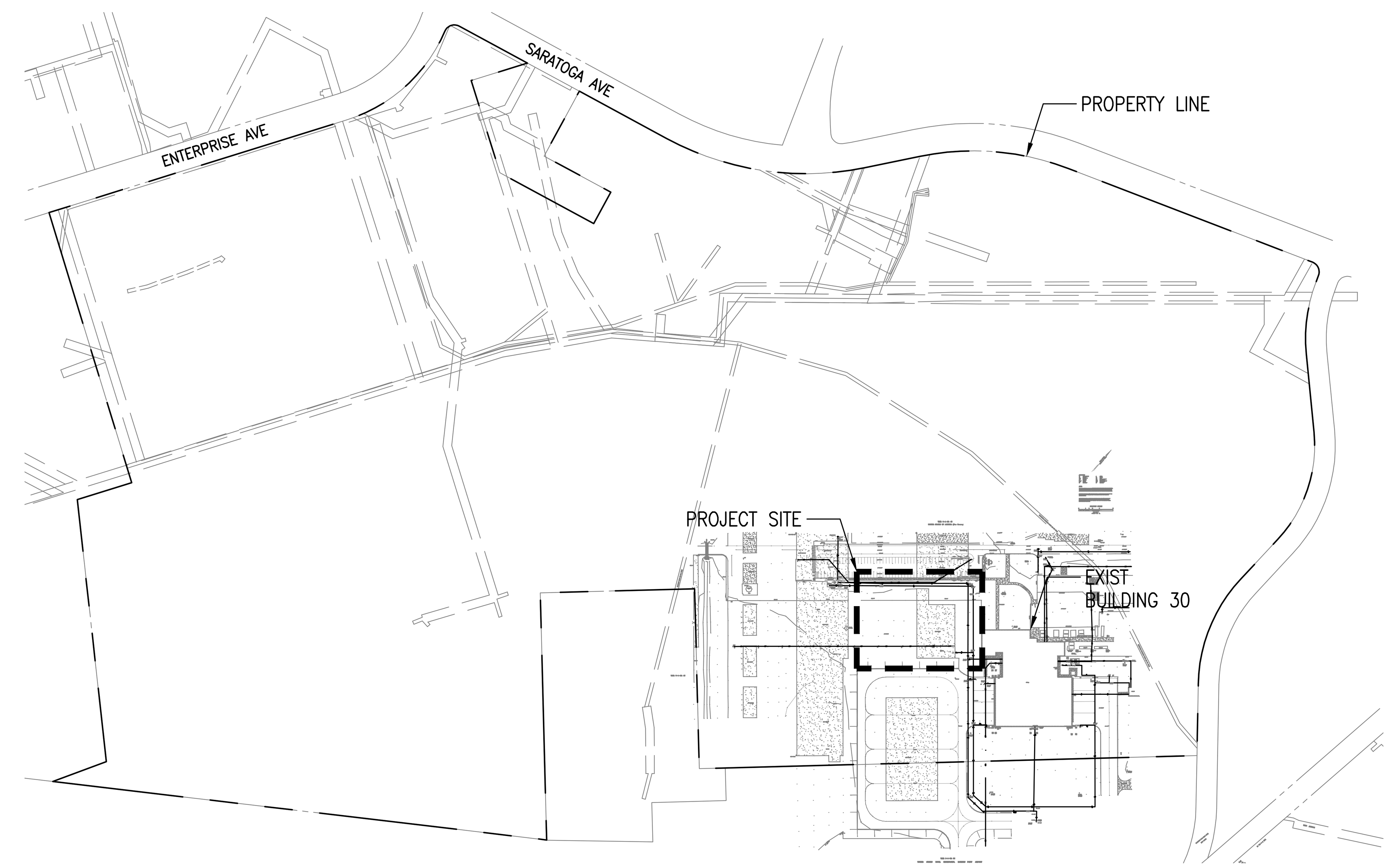

3 T-1.00 PROJECT SITE MAP
NOT TO SCALE

Okahara and Associates Inc.
CONSULTING ENGINEERS

CHARLES L. JURY
LICENSED PROFESSIONAL ENGINEER
NO. 13190-C
HAWAII, USA

4/30/2020
SIGNATURE LICENSE EXPIRES

SYM	DESCRIPTION	DATE	APPR

SUBMITTAL PHASE: BID SET

SUBMITTAL DATE: 03/23/2020

DES AHN | DRW AHN | CHK CLJ

STATE OF HAWAII
FACILITY MANAGEMENT OFFICE
DEPARTMENT OF DEFENSE
DESIGN AND PROJECT MANAGEMENT BRANCH

HAWAII ARMY NATIONAL GUARD

KALAELOA OAHU

ARMY AVIATION SUPPORT FACILITY BUILDING 30

TITLE SHEET, VICINITY MAP, ISLAND MAP, AND PROJECT SITE MAP

SCALE: AS NOTED

STATE JOB NO. CA-1825-C

FEDERAL PROJECT NO. 15190024

SHEET 1 OF 57

001

INDEX TO DRAWINGS

SHEET NO.	DWG NO.	DESCRIPTION
1	001	TITLE SHEET, VICINITY MAP, ISLAND MAP, AND PROJECT SITE MAP
2	C001	DRAWING INDEX AND CONSTRUCTION NOTES
3	C002	CONSTRUCTION NOTES
4	C003	CONSTRUCTION NOTES
5	C004	GENERAL SITE PLAN
6	C005	BID ALTERNATES PLAN
7	C006	EXISTING CONDITIONS AND DEMOLITION PLAN
8	C100	SITE PLAN
9	C200	GRADING PLAN
10	C201	CROSS SECTIONS
11	C300	UTILITY PLAN
12	C301	UTILITY PROFILES
13	C400	DETAILS – 1
14	C401	DETAILS – 2
15	C402	DETAILS – 3
16	C403	DETAILS – 4
17	C404	DETAILS – 5
18	C405	DETAILS – 6
19	C501	EROSION AND SEDIMENT CONTROL PLAN AND DETAILS CATEGORY 5
20	C502	EROSION AND SEDIMENT CONTROL NOTES
21	A001	GENERAL NOTES, DRAWING SYMBOLS, ARCHITECTURAL ABBREVIATIONS
22	A101	FLOOR PLAN
23	A102	REFLECTED CEILING PLAN
24	A103	ROOF PLAN
25	A201	EXTERIOR ELEVATIONS
26	A301	SECTIONS
27	A311	WALL SECTIONS
28	A511	DOOR DETAILS
29	A521	ROOF DETAILS
30	A601	DOOR & WINDOW SCHEDULE/TYPES
31	A611	FINISH & MOUNTING SCHEDULE
32	S100	STRUCTURAL GENERAL NOTES
33	S200	TYPICAL DETAILS
34	S201	COLD FORMED STEEL FRAMING TYPICAL DETAILS
35	S300	STRUCTURAL SITE PLAN
36	S400	BUILDING FOUNDATION AND ROOF FRAMING PLAN, SECTION
37	S500	CONCRETE DETAILS
38	S501	FRAMING DETAILS
39	S600	PHOTOVOLTAIC FRAME SECTION AND DETAILS
40	M100	MECHANICAL LEGEND, SCHEDULES AND NOTES
41	M200	MECHANICAL SITE PLAN – BASE BID
42	M201	MECHANICAL SITE PLAN – ALTERNATE DEDUCTIVES
43	M300	MECHANICAL EQUIPMENT ROOM PLAN AND WASH RACK RULES SIGN DETAIL
44	M400	WASH RACK SCHEMATIC DIAGRAM AND SEQUENCE OF OPERATION
45	M401	OIL WATER SEPARATOR PIPING DIAGRAM AND CONTROL PANEL ELEVATION
46	M402	EQUIPMENT ROOM PIPING DIAGRAM
47	M500	MECHANICAL DETAILS
48	E001	SYMBOL LIST, GENERAL NOTES
49	E101	DEMOLITION SITE LIGHTING PLAN
50	E201	ELECTRICAL SITE PLAN 1
51	E202	ELECTRICAL SITE PLAN 2
52	E301	NEW SITE LIGHTING PLAN
53	E401	EQUIPMENT BUILDING ELECTRICAL PLAN
54	E501	EQUIPMENT BUILDING LIGHTING PLAN
55	E601	ONE–LINE DIAGRAM
56	E602	LIGHT POLE DETAILS
57	E603	PANEL SCHEDULES, LIGHT FIXTURE SCHEDULE

COVID–19 NOTES:

1. DURING THE COVID–19 PANDEMIC, CONTRACTOR SHALL FOLLOW THE GUIDELINES THAT ARE PUT OUT BY THE STATE OF HAWAII.

GENERAL NOTES:

1. THE CONTRACTOR SHALL COMPLETE ALL REQUIREMENTS STATED IN THE CONTRACT.
2. THE CONTRACTOR'S NORMAL WORKING HOURS SHALL BE IN ACCORDANCE WITH TECHNICAL PROVISION SECTION 01310. NO WORK WILL BE PERFORMED ON STATE HOLIDAYS, AIRPORT EMERGENCIES, WEEKENDS, OR WHEN POOR WEATHER RESTRICTS CONSTRUCTION.
3. THE EXISTING TOPOGRAPHY AND LOCATIONS OF EXISTING AIRPORT LAYOUT AS SHOWN ON THE DRAWINGS ARE BASED TOPOGRAPHIC SURVEY PERFORMED BY CONTROLPOINT SURVEYING INC. THE CONTRACTOR IS RESPONSIBLE FOR VERIFICATION OF EXISTING CONDITIONS.
4. PRIOR TO STARTING ANY WORK, THE ENGINEER WILL DETERMINE IF ENVIRONMENTAL CONTROLS ARE NEEDED. NO WORK SHALL COMMENCE UNTIL THE ENGINEER'S WRITTEN AUTHORIZATION TO COMMENCE WORK IS RECEIVED. THE ENGINEER MAY REQUIRE WORK UNDER ENVIRONMENTAL CONTROLS AT ANY TIME DURING THE PROJECT, EVEN IF IT IS NOT REQUIRED PRIOR TO THE PERFORMANCE OF ANY WORK.
5. TO ENSURE PUBLIC AND WORKER SAFETY ON THIS PROJECT, THE STATE WILL NOT ALLOW ANY WORK TO COMMENCE UNTIL THE CONTRACTOR'S DETAILED PROJECT WORK SCHEDULE IS APPROVED BY THE STATE PROJECT MANAGER. SAID SCHEDULE SHALL PICTORIALLY SHOW THE WORK AREA(S) FOR EACH WORKDAY. THE CONTRACTOR SHALL KEEP ALL PERSONNEL AND EQUIPMENT UNDER ITS JURISDICTION WITHIN THE WORK AREA(S) AND ASSIGNED AIRPORT OPERATIONS AREA (AOA) TRAVEL ROUTE(S).
6. THE CONTRACTOR SHALL STAGE THEIR EQUIPMENT ONLY AT STATE DESIGNATED LOCATIONS AND SHALL COMPLY WITH ALL ASSOCIATED REQUIREMENTS. THE STAGING AREA(S) WILL BE DETERMINED BY THE AIRPORT OPERATION DISTRICT OFFICE.
7. THE CONTRACTOR SHALL ONLY ENTER AND EXIT THE AOA THROUGH STATE ASSIGNED GATES.
8. THE CONTRACTOR MAY NOT USE TEMPORARY AIR OPERATIONS AREA (AOA) BADGES/PERMITS. THESE ITEMS WILL ONLY BE ISSUED BY THE STATE DURING STATE EMERGENCIES.
9. THE CONTRACTOR SHALL CLEAN UP MATERIAL SPILLS AT THE END OF EACH WORK DAY AND/OR WHENEVER THEY OCCUR AND SHALL ONLY DISCARD EXCESS ASPHALT CONCRETE AT AREAS DESIGNATED BY THE STATE.
10. THE CONSTRUCTION STAGING AND MATERIAL STOCKPILING AREAS WILL BE DETERMINED BY THE AIRPORT OPERATIONAL MANAGER.
11. WORK TO BE DONE IN THE INTERSECTION AREAS, INCLUDING RUNWAYS AND TAXIWAYS, MAY BE SCHEDULED ON THE WEEKEND WITHOUT ADDITIONAL COST TO THE AIRPORTS DIVISION AND HIARNG.
12. THE CONTRACTOR SHALL OPERATE BOTH A POWER BROOM AND VACUUM SWEEPER AT ALL TIMES TO ENSURE THAT THE AOA REMAINS FOD FREE.
13. THE RUNWAY AND TAXIWAY LIGHTS SHOULD BE SWITCHED OFF WHEN WORK IS OCCURRING OR WHEN NOT IN USE.
14. THE CONTRACTOR SHALL HAVE AT LEAST TWO (2) PEOPLE ON THE AOA POSSESSING AND CONTINUOUSLY MONITORING THE FOLLOWING FULLY CHARGED COMMUNICATION DEVICES:
    1. A TWO–WAY RADIO CAPABLE OF COMMUNICATING ON APPLICABLE FREQUENCIES; AND
    2. A CELLULAR TELEPHONE, WITH A LISTING OF ALL REQUIRED EMERGENCY CONTACT NUMBERS.
15. CONTRACTOR SHALL RE–PLANT AND PROVIDE IRRIGATION AND MAINTENANCE OF ANY DISTURBED PLANTINGS/LANDSCAPING FOR A PERIOD OF 90 CALENDAR DAYS OR UNTIL VEGETATION TAKES ROOT, WHICHEVER IS SHORTER.
16. THE CONTRACTOR IS RESPONSIBLE FOR JOBSITE ADMINISTRATION. PROVIDE A COMPETENT SUPERINTENDENT ON THE JOB AND PROVIDE AN ADEQUATE STAFF TO EXECUTE THE WORK. THE SUPERINTENDENT SHALL HAVE AT LEAST FIVE (5) YEARS OF CONSTRUCTION AND PROJECT MANAGEMENT EXPERIENCE.

PAINTING NOTES:

1. THE FINISH GRADE OF THE RESURFACE AREA WILL BE PENDING ON CONTRACTOR'S VERIFICATION OF EXISTING FIELD CONDITIONS.
2. BEFORE THE END OF EACH WORKDAY, THE CONTRACTOR SHALL PAINT EITHER TEMPORARY OR PERMANENT PAVEMENT MARKINGS, AS DIRECTED BY THE ENGINEER, WITHIN THE WORK AREA WHERE THE ORIGINAL PAVEMENT MARKINGS WERE REMOVED DUE TO THE UTILITY WORK.
3. ALL PAVEMENT MARKINGS TO BE PAINTED ACCORDING TO THE CONTRACT SHALL BE LAID OUT BY A LICENSED SURVEYOR WITH SUFFICIENT REFERENCE POINTS. DETAILS FOR NEW PAVEMENT MARKING SHALL BE IN ACCORDANCE WITH FAA ADVISORY CIRCULAR (AC) 150/5340–1K, "STANDARDS FOR AIRPORT MARKING".
4. THE CONTRACTOR SHALL NOT DISCARD ANY EXCESS PAINT ON EXISTING PAVEMENT MARKINGS, INCLUDING PERFORMING TEST SPRAYS ON THE EXISTING MARKINGS, SPRAYING EXISTING MARKINGS TO CLEAN PAINT GUNS, AND PAINTING ADDED MARKING TO AVOID REQUIRED PAINT CLEAN UP. THE CONTRACTOR SHALL POSSESS TRAPS FOR EXCESS SPRAYING AND TEST SPRAY, AND A WATERPROOF CONTAINER TO CAPTURE AND HOLD ALL PAINTING WASH WATER. ALL WASH WATER SHALL BE PROPERLY HAULED AND DISPOSED OFF THE AIRPORT DAILY.
5. THE CONTRACTOR SHALL PERFORM THEIR CONTRACTED PAINTING WORK ON THE ASPHALT CONCRETE TEST SECTION(S), AND THE PAINTED PAVEMENT MARKING SPECIMENS WILL BE EVALUATED BY THE ENGINEER FOR CONFORMANCE TO THE CONTRACT REQUIREMENTS. NONCONFORMING PAINTING WORK WILL NOT BE ACCEPTED BY THE ENGINEER, AND THE TEST SECTION(S) WILL NOT BE ACCEPTED UNTIL PAINTING WORK CONFORMS TO THE CONTRACT REQUIREMENTS.

AC PAVEMENT NOTES:

1. THE CONTRACTOR SHALL COMPLETELY REPLACE PAVEMENT REMOVED BEFORE THE END OF EACH WORKDAY, INCLUDING CLEAN ALL WORK AREAS.
2. TO ENSURE THAT NO MILITARY AND COMMERCIAL AIRCRAFT SERVING THE MILITARY AND PUBLIC IS DAMAGED BY FOREIGN OBJECT DEBRIS; THE CONTRACTOR SHALL KEEP THE WORK AREAS, AOA TRAVEL ROUTE, AND ALL ADJACENT AREAS CLEAN AT ALL TIMES BY CONTINUOUSLY OPERATING A POWER BROOM AND AT LEAST TWO VACUUM SWEEPERS. IF THESE AREAS ARE NOT PROPERLY CLEANED, THE ENGINEER, MILITARY, OR AIRPORT MANAGER MAY REQUIRE REMEDIAL CLEANING AS STATED IN THE TECHNICAL PROVISIONS.
3. THE CONTRACTOR SHALL SCHEDULE THEIR WORK TO COMPLETE FULL PAVING WIDTH WITHIN EACH WORK AREA TO PRODUCE HOT LONGITUDINAL JOINTS.
4. SAW CUTTING OPERATIONS MAY BE CONTINUOUS, EXCEPT WHEN PERFORMING WORK ON THE TEST SECTION. SAW CUT SHALL BE STRAIGHT, VERTICAL, AND TO A MINIMUM DEPTH OF THREE (3) INCHES. TACK COAT SHALL BE APPLIED TO SAWED CUT FACE PER TECHNICAL SPECIFICATION SECTION 02513.
5. THE CONTRACTOR SHALL CHIP EXCAVATION CORNERS STRAIGHT AND VERTICAL.
6. THE CONTRACTOR IS FULLY RESPONSIBLE TO ENSURE THAT ALL EXPOSED SURFACES TO RECEIVE NEW ASPHALT CONCRETE ARE FREE FROM DUST, DEBRIS, AND POTENTIAL SLIP PLANES.
7. PRIOR TO STARTING FULL PAVEMENT REPAIR OPERATIONS, THE CONTRACTOR SHALL CONSTRUCT TEST SECTION(S) OVER A MINIMUM OF FORTY–EIGHT–HOUR (48–HOUR) PERIOD. THE CONTRACTOR SHALL ALSO WAIT A MINIMUM FIVE (5) ADDITIONAL WORKDAYS THEREAFTER FOR THE STATE TO ACCEPT THE TEST SECTION(S). FULL PAVEMENT REPAIR OPERATIONS MAY ONLY COMMENCE AFTER RECEIPT OF THE STATE'S PROJECT MANAGER'S WRITTEN ACCEPTANCE.
8. ROLLING FRESHLY PLACED AC MIX SHALL BE DONE IN THE FOLLOWING ORDER:
    A. TRANSVERSE JOINTS,
    B. LONGITUDINAL JOINTS (WHEN ADJOINING A PREVIOUSLY PLACED LANE),
    C. INITIAL OR BREAKDOWN ROLLING,
    D. SECOND OR INTERMEDIATE ROLLING, AND
    E. FINISH ROLLING.

HAWAII ARMY NATIONAL GUARD

Okahara and Associates Inc.
CONSULTING ENGINEERS

CHARLES L. JURY
LICENSED PROFESSIONAL ENGINEER
NO. 13190–C
HAWAII USA

THIS WORK WAS PREPARED BY ME OR UNDER MY SUPERVISION AND CONSTRUCTION OF IMPROVEMENTS WERE OBSERVED BY ME OR UNDER MY DIRECT SUPERVISION.

SIGNATURE — LICENSE EXPIRES 4/30/2020

STM	DESCRIPTION	DATE	APPR

SUBMITTAL PHASE: BID SET

SUBMITTAL DATE: 03/23/2020

DES AHN | DRW AHN | CHK CLJ

STATE OF HAWAII
FACILITY MANAGEMENT OFFICE

DEPARTMENT OF DEFENSE
DESIGN AND PROJECT MANAGEMENT BRANCH

HAWAII ARMY NATIONAL GUARD

KALAELOA
OAHU

ARMY AVIATION SUPPORT FACILITY BUILDING 30

DRAWING INDEX AND CONSTRUCTION NOTES

SCALE: AS NOTED

STATE JOB NO. CA–1825–C

FEDERAL PROJECT NO. 15190024

SHEET 2 OF 57

C001

NOTES FOR WATER SYSTEM (PRIVATE):

1. ALL MATERIALS USED AND METHODS OF CONSTRUCTION OF WATER SYSTEM FACILITIES SHALL BE IN ACCORDANCE WITH THE LATEST REVISIONS OF BWS STANDARDS. CONTRACTOR SHALL OBTAIN THE LATEST REVISIONS OF THE BWS STANDARD DETAILS BEFORE COMMENCING CONSTRUCTION.

2. ALL WATER SYSTEM WORK SHALL BE PERFORMED BY CONTRACTORS POSSESSING VALID STATE OF HAWAII CONTRACTOR'S LICENSES, REGARDLESS OF THE VALUE OF THE WORK.

3. THE EXACT DEPTH AND LOCATION OF EXISTING WATERLINES, SERVICE LATERALS AND OTHER UTILITIES ARE NOT KNOWN. IT SHALL BE THE CONTRACTOR'S RESPONSIBILITY TO LOCATE SAME PRIOR TO TRENCHING FOR THE NEW WATERLINE. THE COST OF LOWERING, RELOCATING OR ADJUSTING EXISTING WATERLINES, SERVICE LATERALS AND OTHER UTILITIES SHALL BE CONSIDERED INCIDENTAL TO THE COST OF THE NEW WATERLINE, UNLESS NOTED OTHERWISE, AND WILL NOT BE PAID FOR SEPARATELY.

4. CONCRETE FOR REACTION BLOCKS AND ANCHOR BLOCKS SHALL BE BWS CLASS 2500.

5. THE MAXIMUM DISTANCE BETWEEN VALVE NUT AND TOP OF VALVE MANHOLE COVER SHALL BE THREE (3) FEET.

6. THE CONTRACTOR SHALL SUBMIT A MATERIALS LIST TO THE ENGINEER FOR APPROVAL PRIOR TO CONSTRUCTION.

7. MINIMUM COVER OVER WATER MAIN, 6" DIAMETER OR LARGER, SHALL BE 3'-0". MINIMUM COVER FOR 4" DIAMETER SHALL BE 2'-6". MINIMUM COVER FOR DIAMETERS LESS THAN 4" SHALL BE 1'-6".

8. BOLTS FOR EXPOSED FLANGED DUCTILE IRON PIPE JOINTS SHALL BE EITHER SILICON BRONZE BOLTS AND NUTS OR 316 STAINLESS STEEL BOLTING WITH THE HEAVY DUTY STAINLESS STEEL NUTS (ONLY) FURNISHED WITH TRIPAC 2000 BLUE COATING SYSTEM. ANTI-SEIZE SHALL NOT BE USED. T-BOLTS FOR DUCTILE IRON MECHANICAL JOINT (MJ) PIPE AND FITTING CONNECTIONS IN UNDERGROUND SITUATIONS SHALL BE ONE OF THE FOLLOWING SYSTEMS:
   - A. 316 STAINLESS STEEL T-BOLTS WITH THE HEAVY DUTY STAINLESS STEEL NUTS (ONLY) FURNISHED WITH TRIPAC 2000 BLUE COATING SYSTEM. ANTI-SEIZE SHALL NOT BE USED.
   - B. COR-TEN T-BOLTS AND NUTS WITH HIGH GRADE ZINC SACRIFICIAL ANODES, EQUIVALENT TO "DURATRON" SACRIFICIAL "SAC-NUT" MODULES, INSTALLED ON THE NUTS FOR ALL STANDARD COR-TEN T-BOLTS.
   - C. COR-TEN T-BOLTS AND NUTS BOTH FACTORY COATED WITH TRIPAC 2000 BLUE COATING SYSTEM BY "TRIPAC FASTENERS".

9. ALL BURIED METALS SHALL BE WRAPPED WITH POLY-WRAP. FOR ALL BURIED INSTALLATIONS OF DUCTILE IRON PIPE AND FITTINGS, POLY-WRAP IS REQUIRED EXCEPT WITHIN CONCRETE JACKETS.

10. LUBRICATE HYDRANT NOZZLE THREADS WITH NON-TOXIC GREASE.

11. WATER MAINS AND APPURTENANCES SHALL BE SUBJECT TO HYDROSTATIC TESTING IN ACCORDANCE WITH THE LATEST REVISION OF AWWA C600, UNDER THE "HYDROSTATIC TESTING" SECTION, TO A PRESSURE OF AT LEAST 1.5 TIMES THE WORKING PRESSURE. UNLESS OTHERWISE STATED IN THE CONSTRUCTION DOCUMENTS OR LIMITED BY THE PRESSURE RATING OF EQUIPMENT, THE PRESSURE TEST AND LEAKAGE TEST SHALL BE PERFORMED AT 225 POUNDS PER SQUARE INCH PRESSURE.

12. CONTRACTOR SHALL NOTIFY NAVAL FACILITIES ENGINEERING COMMAND (NAVFAC), POTABLE WATER DIVISION (PW64) FOURTEEN (14) DAYS PRIOR TO CONNECTING TO ANY WATER LINE AND THIRTY (30) DAYS PRIOR TO THE DESIRED DATE OF WATER OUTAGE.

DRAIN LINE NOTE:

1. DRAIN LINES SHALL BE INSTALLED IN ACCORDANCE WITH THESE PLANS AND SPECIFICATIONS.

NOTES FOR CHLORINATION OF WATER SYSTEMS (PRIVATE):

1. WATER MAINS AND APPURTENANCES SHALL BE DISINFECTED IN ACCORDANCE WITH AWWA C651. ALL PROCEDURES AND MATERIALS (LIQUID CHLORINE OR CALCIUM HYPOCHLORITE) USED FOR THE CHLORINATION OF THE PROJECT SHALL CONFORM TO AWWA REQUIREMENTS.

2. PRIOR TO CHLORINATION, THE PROJECT PIPELINES SHALL BE THOROUGHLY CLEANED. CLEANING OF LINES 8" AND LARGER SHALL BE BY PIGGING USING FOAM PIGS. SMALLER LINES CAN BE FLUSHED IN ACCORDANCE WITH AWWA REQUIREMENTS IF ADEQUATE WATER SUPPLY IS PROVIDED, OTHERWISE BY PIGGING. THE CONTRACTOR SHALL SUBMIT HIS PLAN FOR PIPELINE CLEANING, INCLUDING FITTING REQUIREMENTS FOR PIGGING, FOR APPROVAL PRIOR TO PROCEEDING.

3. THE INTERIOR SURFACES OF THE PROJECT SHALL BE EXPOSED TO THE CHLORINATING SOLUTION FOR A MINIMUM OF 24 HOURS AND THE CHLORINE RESIDUAL SHALL NOT BE LESS THAN 10 PPM AFTER SUCH TIME.

4. SHOULD CALCIUM HYPOCHLORITE BE USED, NO SOLID AND/OR UNDISSOLVED PORTION OF THE COMPOUND SHALL BE INTRODUCED INTO ANY SECTION OF THE PROJECT TO BE CHLORINATED.

5. AT THE END OF THE 24-HOUR DISINFECTION PERIOD, REPRESENTATIVE SAMPLES SHALL BE TAKEN AND ANALYZED TO ASSURE A CHLORINE RESIDUAL OF AT LEAST 10 PPM. MEASUREMENTS FOR CHLORINE RESIDUAL TESTS SHALL BE BY A TRAINED, QUALIFIED TESTER APPROVED BY THE DIRECTOR.

6. SHOULD THE RESULTS INDICATE ADEQUATE CHLORINATION, THE PROJECT SHALL BE THOROUGHLY FLUSHED AND FILLED WITH POTABLE WATER FROM THE EXISTING POTABLE WATER SYSTEM AND AGAIN TESTED FOR CHLORINE RESIDUAL. THE FLUSHING SHALL BE CONSIDERED ADEQUATE IF THE TEST RESULTS INDICATE THAT THE WATER IN THE PROJECT HAS A COMPARABLE CHLORINE RESIDUAL AS THE WATER IN THE EXITING SYSTEM.

7. FOLLOWING THE ACCEPTABLE FLUSHING OF THE HIGH CONCENTRATION CHLORINE SOLUTION, TWO CONSECUTIVE SETS OF ACCEPTABLE SAMPLES SHALL BE TAKEN AT LEAST 24 HOURS APART FROM REPRESENTATIVE POINTS IN THE PROJECT AND SUBJECTED TO MICROBIOLOGICAL TESTS PERFORMED BY A CERTIFIED LABORATORY APPROVED BY THE DEPARTMENT OF HEALTH. AT LEAST ONE SET OF SAMPLES SHALL BE COLLECTED AND TESTED FROM EVERY 1,200 FEET OF THE NEW WATER MAIN, PLUS ONE SET FROM THE END OF THE LINE AND AT LEAST ONE SET FROM EACH BRANCH. POSITIVE RESULTS WILL NOT BE ACCEPTABLE AND THE ENTIRE CHLORINATION PROCESS WILL BE REPEATED.

8. ANALYSIS FOR RESIDUAL CHLORINE SHALL BE MADE IN ACCORDANCE WITH "STANDARD METHODS FOR THE EXAMINATION OF WATER AND WASTEWATER", AMERICAN PUBLIC HEALTH ASSOCIATION, CURRENT EDITION.

9. MICROBIOLOGICAL TESTS SHALL BE MADE IN ACCORDANCE WITH "STANDARD METHODS FOR THE EXAMINATION OF WATER AND WASTEWATER", AMERICAN PUBLIC HEALTH ASSOCIATION, CURRENT EDITION.

10. THE DEVELOPER/CONTRACTOR SHALL BE RESPONSIBLE FOR ALL COSTS ASSOCIATED WITH ALL OF THE FOREGOING.

EROSION AND SEDIMENT CONTROL NOTES:

CONSTRUCTION MANAGEMENT TECHNIQUES

1. CLEARING AND GRUBBING SHALL BE HELD TO THE MINIMUM NECESSARY FOR GRADING AND EQUIPMENT OPERATION. LIMITS OF THE CLEARING AND GRUBBING SHALL BE STAKED PRIOR TO THE START OF CONSTRUCTION.

2. CONSTRUCTION SHALL BE SEQUENCED TO MINIMIZE THE EXPOSURE TIME OF THE CLEARED SURFACE AREA.

3. CONSTRUCTION SHALL BE STAGED OR PHASED FOR LARGE PROJECTS. AREAS OF ONE PHASE SHALL BE STABILIZED BEFORE ANOTHER PHASE IS INITIATED. STABILIZATION SHALL BE ACCOMPANIED BY TEMPORARILY OR PERMANENTLY PROTECTING THE DISTURBED SOIL SURFACE FROM RAINFALL IMPACTS AND RUNOFF.

4. EROSION AND SEDIMENT CONTROL MEASURES SHALL BE IN PLACE AND FUNCTIONAL BEFORE EARTH MOVING OPERATIONS BEGIN. THESE MEASURES SHALL BE PROPERLY CONSTRUCTED AND MAINTAINED THROUGHOUT THE CONSTRUCTION PERIOD. PERMANENT RETENTION AREAS SHOULD BE CONSTRUCTED PRIOR TO ANY OTHER CLEARING, GRUBBING, OR GRADING OPERATION. SEDIMENT BARRIERS SHALL BE INSTALLED ALONG THE ENTIRE DOWNSLOPE SIDE OF THE ACTIVE CONSTRUCTION ZONE IN AREAS WHERE ON-SITE RUNOFF FLOWS OFF THE PROJECT SITE.

5. ALL CONTROL MEASURES SHALL BE CHECKED AND REPAIRED AS NECESSARY, FOR EXAMPLE, WEEKLY IN DRY PERIODS AND WITHIN TWENTY-FOUR HOURS AFTER ANY RAINFALL OF 0.5 INCHES OR GREATER WITHIN A 24 HOUR PERIOD. DURING PROLONGED RAINFALL, DAILY CHECKING IS NECESSARY. THE PERMITTEE SHALL MAINTAIN RECORDS OF CHECKS AND REPAIRS.

6. THE PERMITTEE SHALL MAINTAIN RECORDS OF THE DURATION AND ESTIMATED VOLUME OF STORM WATER DISCHARGE(S).

7. A SPECIFIC INDIVIDUAL SHALL BE DESIGNATED TO BE RESPONSIBLE FOR EROSION AND SEDIMENT CONTROLS ON EACH PROJECT SITE.

8. NO HYDRO-TESTING EFFLUENT SHALL BE DISPOSED OF OFF-SITE.

VEGETATION CONTROLS

1. PRE-CONSTRUCTION VEGETATIVE GROUND COVER SHALL NOT BE DESTROYED, REMOVED OR DISTURBED MORE THAN TWENTY CALENDAR DAYS PRIOR TO LAND DISTURBANCE.

2. TEMPORARY SOIL STABILIZATION WITH APPROPRIATE VEGETATION SHALL BE APPLIED ON AREAS THAT WILL REMAIN UNFINISHED FOR MORE THAN THIRTY CALENDAR DAYS.

3. PERMANENT SOIL STABILIZATION WITH PERENNIAL VEGETATION OR PAVEMENT SHALL BE APPLIED AS SOON AS PRACTICAL AFTER FINAL GRADING. IRRIGATION AND MAINTENANCE OF THE PERENNIAL VEGETATION SHALL BE PROVIDED FOR NINETY CALENDAR DAYS OR UNTIL THE VEGETATION TAKES ROOT, WHICHEVER IS SHORTER.

STRUCTURAL CONTROLS

1. STORM WATER FLOWING TOWARD THE CONSTRUCTION AREA SHALL BE DIVERTED BY USING APPROPRIATE CONTROL MEASURES, AS PRACTICAL.

2. EROSION CONTROL MEASURES SHALL BE DESIGNED ACCORDING TO THE SIZE OF DISTURBED OR DRAINAGE AREAS TO DETAIN RUNOFF AND TRAP SEDIMENT AND APPROVED BY THE DESIGNER OF RECORD.

3. WATER MUST BE DISCHARGED IN A MANNER THAT THE DISCHARGE SHALL NOT CAUSE OR CONTRIBUTE TO A VIOLATION OF THE BASIC WATER QUALITY CRITERIA AS SPECIFIED IN SECTION 11-54-04 OF THE HAR.

SURVEY NOTES:

1. EXISTING TOPOGRAPHIC SURVEY PREPARED BY CONTROL POINT SURVEYING, INC.

2. AZIMUTHS AND COORDINATES ARE REFERRED TO NAD83 (HARN) STATE PLANE COORDINATE SYSTEM, HAWAII ZONE 3, U.S. FEET.

3. UNDERGROUND UTILITY LINES AND/OR STRUCTURES, IF SHOWN, ARE PROVIDED FOR INFORMATION ONLY AND ARE BASED ON INFORMATION SHOWN ON PLANS/MAPS PREPARED BY OTHERS. THE INFORMATION SHOWN, THEREFORE, MAY OR MAY NOT BE REPRESENTATIVE OF ACTUAL FIELD CONDITIONS. THE UNDERGROUND UTILITY LINES AND/OR STRUCTURES MAY OR MAY NOT BE PRESENT AT THE LOCATIONS SHOWN OR OTHER UNDERGROUND UTILITY LINES AND/OR STRUCTURES NOT SHOWN MAY BE PRESENT.

4. UNLESS OTHERWISE NOTED, ALL LOCATIONS OF UNDERGROUND UTILITY LINES AND/OR STRUCTURES ARE APPROXIMATE. NO GUARANTEE IS MADE ON THE ACCURACY OR COMPLETENESS OF THE INFORMATION SHOWN. THE USER(S) OF THIS TOPOGRAPHIC SURVEY MAP SHALL VERIFY THE INFORMATION, AS NEEDED, DURING DESIGN AND CONSTRUCTION.

SEWER NOTES (PRIVATE):

1. ALL SEWER CONSTRUCTION SHALL BE PERFORMED IN ACCORDANCE WITH THE STANDARD SPECIFICATIONS FOR PUBLIC WORKS CONSTRUCTION, SEPTEMBER 1986, STANDARD DETAILS FOR PUBLIC WORKS CONSTRUCTION, SEPTEMBER 1984, AS AMENDED, OF THE DEPARTMENT OF PUBLIC WORKS, CITY AND COUNTY OF HONOLULU AND THE COUNTIES OF KAUAI, MAUI AND HAWAII, CURRENT CITY PRACTICES, THE REVISED ORDINANCES OF HONOLULU, 1990, AS AMENDED, AND THE DESIGN STANDARDS OF THE DEPARTMENT OF ENVIRONMENTAL SERVICES, VOL. 1, JULY 2017.

2. CRUSHED ROCK CRADLE IS PERMITTED WHERE SOIL IS STABLE. IN AREAS OF UNSTABLE SOIL, THE MAKER OF THE PLANS AND THE CONSTRUCTION ENGINEER WILL DETERMINE THE PIPE SUPPORT REQUIRED.

3. TREES IN THE ROAD RIGHT-OF-WAY SHALL BE SITUATED A MINIMUM OF SIX (6) FEET FROM THE CITY'S SEWER LINES.

4. THE UNDERGROUND PIPES, CABLES OR DUCTLINES KNOWN TO EXIST BY THE ENGINEER FROM HIS RESEARCH OF RECORDS ARE INDICATED ON THE PLANS. THE CONTRACTOR SHALL VERIFY THE LOCATION AND DEPTH OF THE FACILITIES, INCLUDING AND AFFECTING SEWER LINES, IN THE PRESENCE OF THE DPP INSPECTOR AND EXERCISE PROPER CARE IN EXCAVATING THE AREA. THE CONTRACTOR SHALL BE RESPONSIBLE AND SHALL PAY FOR ALL DAMAGED UTILITIES.

5. SEWER LATERAL LOCATION MEASURED ALONG THE FRONT PROPERTY LINE SHALL BE SIX (6) FEET FROM THE PROPERTY CORNER UNLESS OTHERWISE NOTED ON THE PLANS AND SHOULD NOT STRADDLE ELECTRICAL TRANSFORMER PAD.

6. SLOPE FOR SEWER LATERALS SHALL BE 1.00% UNLESS OTHERWISE NOTED.

7. BUILDING PLUMBING FACILITIES SHALL BE CONTROLLED BY SEWER LATERAL INVERTS.

8. THE CONTRACTOR SHALL BE RESPONSIBLE FOR MAINTAINING CONTINUOUS SEWER SERVICE TO ALL AFFECTED AREAS DURING CONSTRUCTION.

9. THE CONSULTING ENGINEER SHALL SUBMIT TO THE DEPARTMENT OF PLANNING AND PERMITTING MYLAR "AS-BUILT" TRACINGS OF THE CONSTRUCTION PLANS AS ACTUALLY CONSTRUCTED, SHOWING ALL CHANGES FROM THE ORIGINAL PLANS.

10. THE CONTRACTOR SHALL BE RESPONSIBLE FOR ANY SEWAGE SPILLS CAUSED DURING CONSTRUCTION. THE CONTRACTOR SHALL NOTIFY THE STATE DEPARTMENT OF HEALTH AND UTILIZE APPROPRIATE SAMPLING AND ANALYZING PROCEDURES. THE CONTRACTOR SHALL BE RESPONSIBLE FOR ALL PUBLIC NOTIFICATIONS AND PRESS RELEASES.

11. THE CONTRACTOR SHALL INSTALL "RAINSTOPPER" MANHOLE INSERTS IN ALL SEWER MANHOLES WITH TYPE "SA" FRAME AND COVER.

12. ALL DROP AND SHALLOW DROP SEWER MANHOLES SHALL BE LINED WITH PLASTIC LINERS. ALSO, IF THE VELOCITY EXCEEDS TEN (10) FEET PER SECOND (FPS), THE SEWER MANHOLE SHALL BE PLASTIC LINED.

13. THE CONTRACTOR SHALL OBTAIN APPROVAL FOR ADVANCE SEWER RISER AGREEMENT AT THE DEPARTMENT OF PLANNING AND PERMITTING AND OBTAIN BUILDING PERMIT FOR PLUMBING WORK BEFORE ANY ADVANCE RISER IS MADE.

14. ALL SEWER PIPE JOINTS WITHIN EASEMENTS SHALL BE WRAPPED WITH GEOTEXTILE ROOT BARRIER.

15. SEWER PIPES THIRTY (30) INCHES AND LARGER SHALL BE OF CORROSION RESISTANT MATERIAL OR PROTECTED INTERNALLY WITH LINING.

16. S4C PIPE CRADLE SEALS SHALL BE INSTALLED TEN (10) FEET FROM ALL SEWER MANHOLES TO PREVENT SOIL MIGRATION.

17. GEOTEXTILE FABRIC TO ENVELOP THE PIPE CRADLE AND SELECT BACKFILL MATERIAL SHALL BE PROVIDED WHERE WATER OR UNSTABLE SOIL CONDITIONS ARE ENCOUNTERED.

Okahara and Associates Inc.
CONSULTING ENGINEERS

CHARLES L. JURY
LICENSED PROFESSIONAL ENGINEER
NO. 13190-C
HAWAII, USA
THIS WORK WAS PREPARED BY ME OR UNDER MY SUPERVISION AND CONSTRUCTION OF THIS PROJECT WILL BE UNDER MY OBSERVATION.
SIGNATURE 4/30/2020 LICENSE EXPIRES

SYM	DESCRIPTION	DATE	APPR

SUBMITTAL PHASE: BID SET
SUBMITTAL DATE: 03/23/2020
DES AHN | DRW AHN | CHK CLJ

STATE OF HAWAII
DEPARTMENT OF DEFENSE
FACILITY MANAGEMENT OFFICE
DESIGN AND PROJECT MANAGEMENT BRANCH
HAWAII ARMY NATIONAL GUARD
KALAELOA OAHU

ARMY AVIATION SUPPORT FACILITY BUILDING 30

CONSTRUCTION NOTES

SCALE: AS NOTED
STATE JOB NO. CA-1825-C
FEDERAL PROJECT NO. 15190024
SHEET 3 OF 57

C002

SEWER NOTES (PRIVATE) CONTINUED:

18. CONFINED SPACE

    FOR ENTRY BY CITY PERSONNEL, INCLUDING INSPECTORS, INTO A PERMIT REQUIRED CONFINED SPACE AS DEFINED IN 29 CFR PART 1910.146(b), THE CONTRACTOR SHALL BE RESPONSIBLE FOR PROVIDING:

    I. ALL SAFETY EQUIPMENT REQUIRED BY THE CONFINED SPACE REGULATIONS APPLICABLE TO ALL PARTIES OTHER THAN THE CONSTRUCTION INDUSTRY, TO INCLUDE, BUT NOT LIMITED TO, THE FOLLOWING:

    A. FULL BODY HARNESSES FOR UP TO TWO PERSONNEL.

    B. LIFELINE AND ASSOCIATED CLIPS.

    C. INGRESS/EGRESS AND FALL PROTECTION EQUIPMENT.

    D. TWO-WAY RADIOS (WALKIE-TALKIES) IF OUT OF LINE-OF-SIGHT.

    E. EMERGENCY (ESCAPE) RESPIRATOR (10 MINUTE DURATION).

    F. CELLULAR TELEPHONE TO CALL FOR EMERGENCY ASSISTANCE.

    G. CONTINUOUS GAS DETECTOR (CALIBRATED) TO MEASURE OXYGEN, HYDROGEN SULFIDE, CARBON

    H. PERSONAL MULTI-GAS DETECTOR TO BE CARRIED BY INSPECTOR.

    II. CONTINUOUS FORCED AIR VENTILATION ADEQUATE TO PROVIDE SAFE ENTRY CONDITIONS.

    III. ONE ATTENDANT/RESCUE PERSONNEL TOPSIDE (TWO, IF CONDITIONS WARRANT IT).

19. THE CONTRACTOR SHALL BE RESPONSIBLE FOR DAMAGE TO ANY GOVERNMENT UTILITY SYSTEM RESULTING FROM CONSTRUCTION OPERATIONS; ANY DAMAGE SHALL BE REPORTED IMMEDIATELY TO THE CONTRACTING OFFICER OR APPROPRIATE GOVERNMENT REPRESENTATIVE. ANY SEWER REPAIR PERFORMED BY THE CONTRACTOR SHALL BE INSPECTED BY THE NAVFAC HAWAII PW64 LINE SECTION INSPECTOR PRIOR TO BACKFILLING.

20. THE CONTRACTOR WILL BE RESPONSIBLE FOR REGULATORY FINES OR PENALTIES THAT MAY BE IMPOSED BY ENVIRONMENTAL REGULATORY AGENCIES (EPA AND/OR STATE DOH) IN THE EVENT OF SEWAGE OVERFLOW OR SPILL RESULTING FROM CONSTRUCTION OPERATIONS.

21. THE CONTRACTOR SHALL REIMBURSE THE GOVERNMENT FOR ANY EMERGENCY RESPONSE EFFORT THAT MAY BE REQUIRED BY GOVERNMENT FORCES TO MITIGATE THE ADVERSE EFFECTS OF ANY SEWAGE OVERFLOW OR SPILL RESULTING FROM THE CONTRACTOR'S OPERATIONS.

22. THE CONTRACTOR SHALL ENSURE THAT LOOSE MATERIAL, TOOLS AND EQUIPMENT FROM CONSTRUCTION OPERATIONS ARE APPROPRIATELY REMOVED FROM THE SEWER COLLECTION SYSTEM. ANY DAMAGE TO DOWNSTREAM LIFT STATION EQUIPMENT RESULTING FROM NEGLIGENCE WILL BE ASSESSED TO THE CONTRACTOR.

23. CONSTRUCTION DEWATERING INTO THE NAVY'S SEWER COLLECTION SYSTEM IS PROHIBITED.

24. WHERE POSSIBLE, FENCE POST FOOTINGS, GATE FOOTINGS, SIGN FOOTINGS, BOLLARDS, ETC. SHALL BE AT LEAST 3' AWAY FROM ANY ACTIVE SEWER MAIN OR LATERAL.

Okahara and Associates Inc.
CONSULTING ENGINEERS

CHARLES L. JURY
LICENSED PROFESSIONAL ENGINEER
NO. 13190-C
HAWAII USA

THIS WORK WAS PREPARED BY ME OR UNDER MY SUPERVISION AND CONSTRUCTION OF THIS PROJECT WILL BE UNDER MY OBSERVATION.

4/30/2020
SIGNATURE | LICENSE EXPIRES

SYM	DESCRIPTION	DATE	APPR

SUBMITTAL PHASE: BID SET
SUBMITTAL DATE: 03/23/2020
DES AHN | DRW AHN | CHK CLJ

STATE OF HAWAII
FACILITY MANAGEMENT OFFICE
DEPARTMENT OF DEFENSE
DESIGN AND PROJECT MANAGEMENT BRANCH
HAWAII ARMY NATIONAL GUARD

KALAELOA OAHU
ARMY AVIATION SUPPORT FACILITY BUILDING 30

CONSTRUCTION NOTES

SCALE: AS NOTED
STATE JOB NO. CA-1825-C
FEDERAL PROJECT NO. 15190024
SHEET 4 OF 57
C003

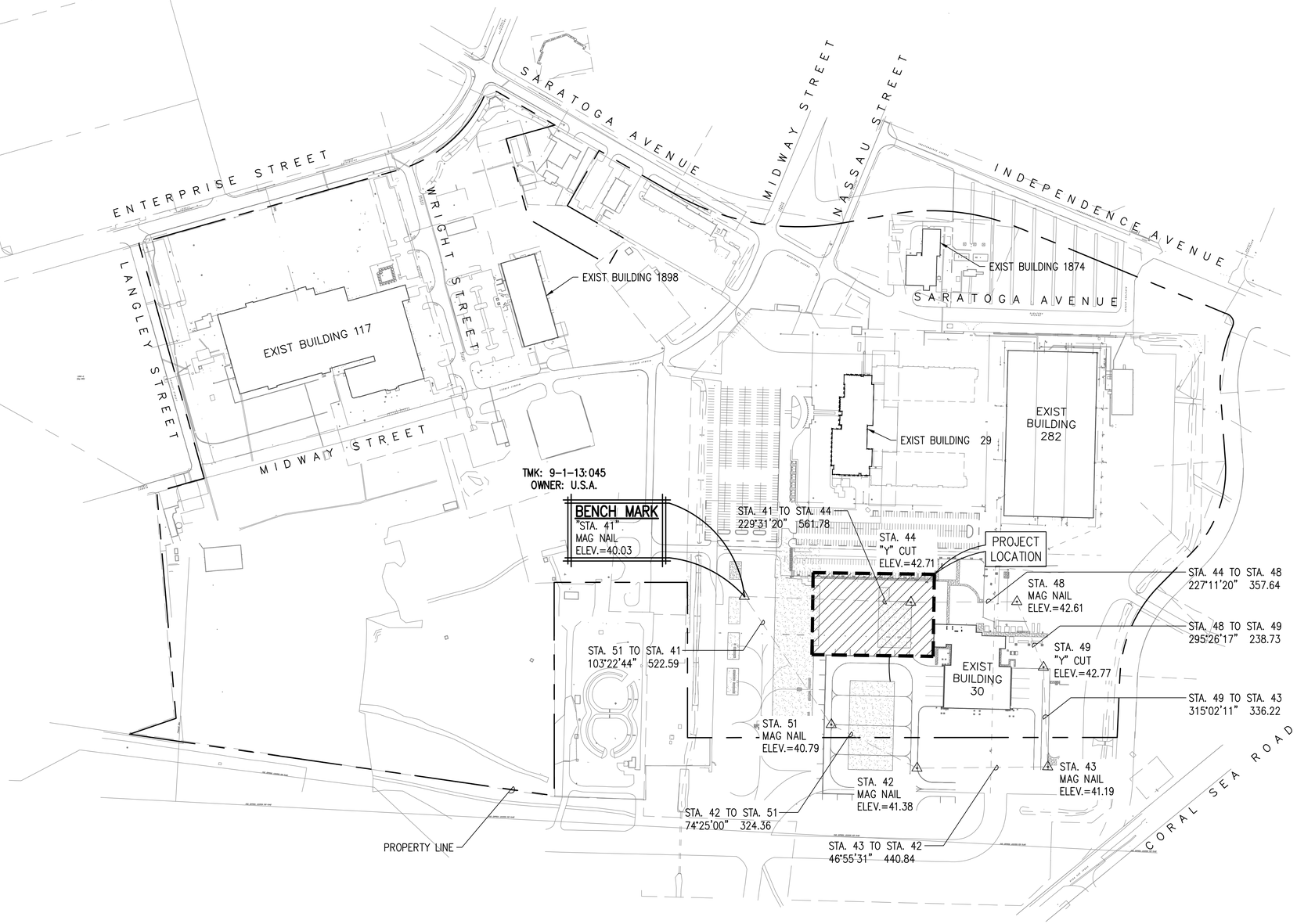

1 C004 GENERAL SITE PLAN
1"=200'

SCALE: 1" = 200'
200' 100' 0 200' 400'

Okehara and Associates Inc.
CONSULTING ENGINEERS

CHARLES L. JURY
LICENSED PROFESSIONAL ENGINEER
NO. 13190-C
HAWAII USA

THIS WORK WAS PREPARED BY ME OR UNDER MY SUPERVISION AND CONSTRUCTION OF THIS PROJECT WAS SUBJECT TO MY OBSERVATION

SIGNATURE 4/30/2020
LICENSE EXPIRES

SYM	DESCRIPTION	DATE	APPR

SUBMITTAL PHASE
BID SET

SUBMITTAL DATE 03/23/2020

DES AHN DRW AHN CHK CLJ

STATE OF HAWAII
FACILITY MANAGEMENT OFFICE

DEPARTMENT OF DEFENSE
DESIGN AND PROJECT MANAGEMENT BRANCH

HAWAII ARMY NATIONAL GUARD

KALAELOA
OAHU

ARMY AVIATION SUPPORT FACILITY BUILDING 30

GENERAL SITE PLAN

SCALE: AS NOTED

STATE JOB NO. CA-1825-C

FEDERAL PROJECT NO. 15190024

SHEET 5 OF 57

C004

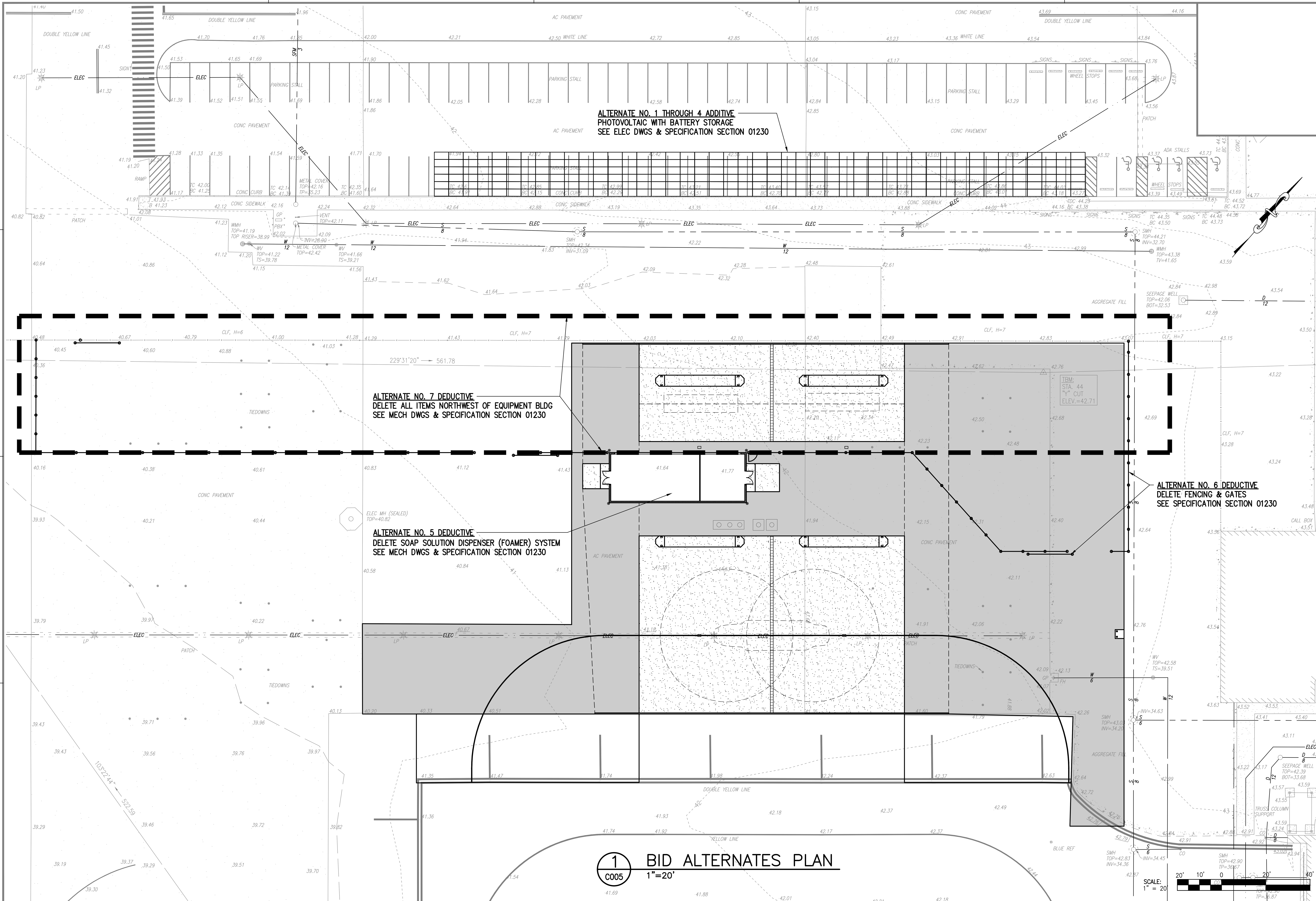

1 BID ALTERNATES PLAN

C005

1"=20'

Okahara and Associates Inc.
CONSULTING ENGINEERS

CHARLES L. JURY
LICENSED PROFESSIONAL ENGINEER
NO. 13190-C
HAWAII USA

THIS WORK WAS PREPARED BY ME OR UNDER MY SUPERVISION AND CONSTRUCTION OF THIS PROJECT WILL BE UNDER MY OBSERVATION.

SIGNATURE — LICENSE EXPIRES 4/30/2020

SYM	DESCRIPTION	DATE	APPR

SUBMITTAL PHASE: BID SET

SUBMITTAL DATE: 03/23/2020

DES CLJ | DRW CLJ | CHK CLJ

STATE OF HAWAII
FACILITY MANAGEMENT OFFICE

HAWAII ARMY NATIONAL GUARD

DEPARTMENT OF DEFENSE
DESIGN AND PROJECT MANAGEMENT BRANCH

KALAELOA OAHU

ARMY AVIATION SUPPORT FACILITY BUILDING 30

BID ALTERNATES PLAN

SCALE: AS NOTED

STATE JOB NO. CA-1825-C

FEDERAL PROJECT NO. 15190024

SHEET 6 OF 57

C005

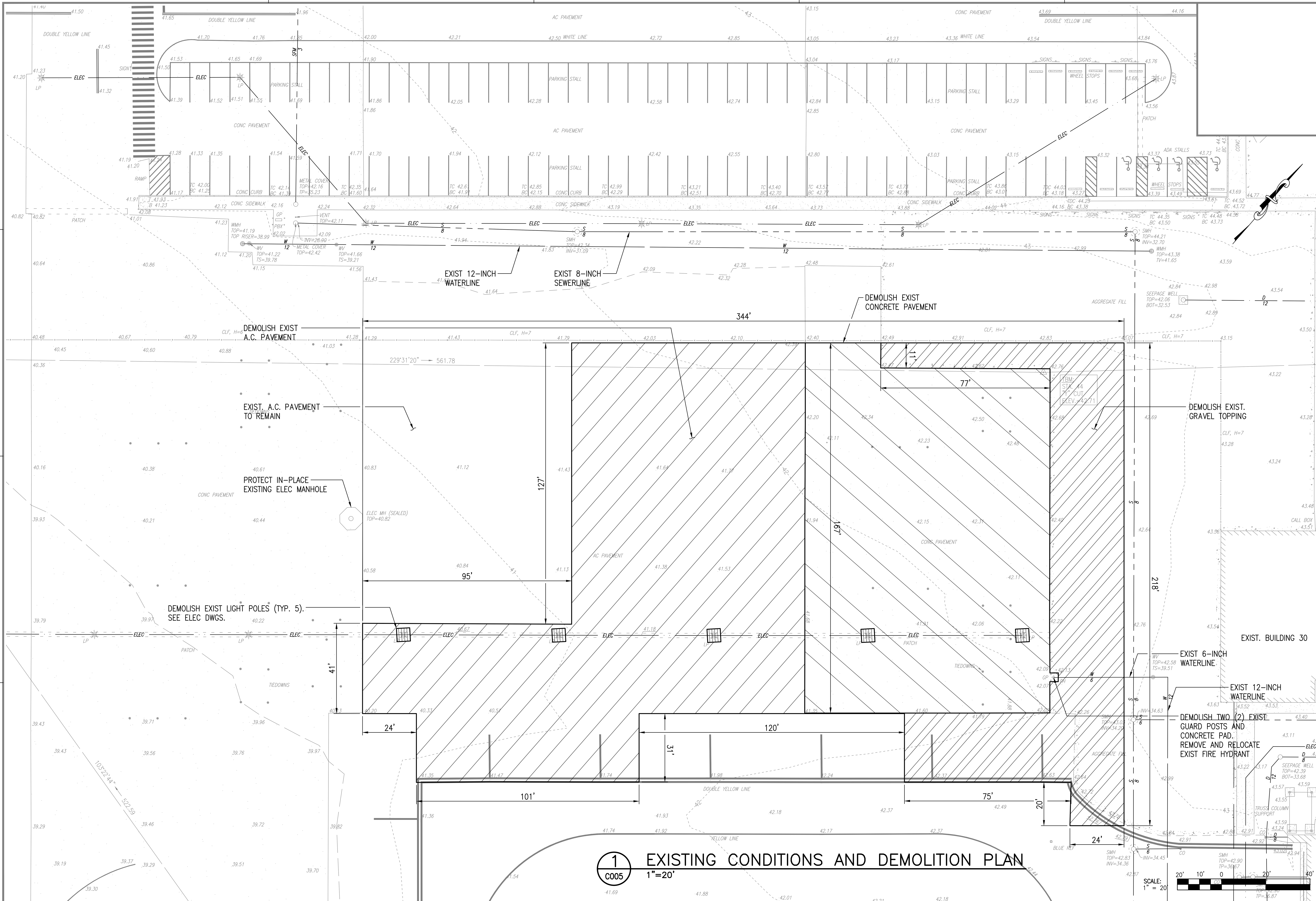

1 EXISTING CONDITIONS AND DEMOLITION PLAN
C005 1"=20'

Okahara and Associates Inc.
CONSULTING ENGINEERS

CHARLES L. JURY
LICENSED PROFESSIONAL ENGINEER
NO. 13190-C
HAWAII USA
THIS WORK WAS PREPARED BY ME OR UNDER MY SUPERVISION AND CONSTRUCTION OF THIS PROJECT WILL BE UNDER MY OBSERVATION.
SIGNATURE 4/30/2020 LICENSE EXPIRES

SYM	DESCRIPTION	DATE	APPR

SUBMITTAL PHASE: BID SET
SUBMITTAL DATE: 03/23/2020
DES AHN | DRW AHN | CHK CLJ

DEPARTMENT OF DEFENSE
DESIGN AND PROJECT MANAGEMENT BRANCH
STATE OF HAWAII
FACILITY MANAGEMENT OFFICE
HAWAII ARMY NATIONAL GUARD
KALAELOA OAHU

ARMY AVIATION SUPPORT FACILITY BUILDING 30

EXISTING CONDITIONS AND DEMOLITION PLAN

SCALE: AS NOTED
STATE JOB NO. CA-1825-C
FEDERAL PROJECT NO. 15190024
SHEET 7 OF 57
C006

PHOTOVOLTAIC WITH BATTERY STORAGE PARKING LOT CANOPY SEE ELECT. AND STRUC. DWGS.

INSTALL NEW END POSTS AND REMOVE EXIST FABRIC AS NEEDED

NEW 20-FT WIDE SLIDING CHAIN LINK FENCE GATE SEE DET. 3/C400

TIE BENCHMARK "STA. 41" TO NORTHWEST CORNER CONC. WASH RACK 227°50'24" 378.96'

TIE BENCHMARK "STA. 41" TO SOUTHWEST CORNER CONC. WASH RACK 251°51'56" 411.75'

EDGE OF NEW A.C. PAVEMENT

INSTALL NEW 6" CURB

INSTALL NEW TRENCH DRAIN (TYP.) SEE DETAIL 2/C405

PROTECT IN-PLACE EXIST. 7-FT HIGH CHAIN LINK FENCE

NEW EQUIPMENT ROOM SEE ARCHITECTURAL DWGS.

NEW PIPE BOLLARD (TYP. 4) SEE STRUCT. DWGS.

NEW CONC. RAMP (TYP. 2) SEE DETAIL 4/C400

WASH STATION 1

WASH STATION 2

WASH STATION 3

WASH STATION 4

NEW 4-FT WIDE PEDESTRIAN GATE SEE DET. 2/C400

APPROX LIMITS OF HEMTT A4 M984A4 RECOVERY TRUCK (TYP. 2)

NEW DIVERTER VALVE SEE DETAIL 1/C403

NEW DIVERTER BOX SEE DETAIL 1/C403

NEW OIL WATER SEPARATOR SEE MECH DWGS.

GRADE CONTROL LINE SEE GRADING PLAN

INSTALL NEW 5' WIDE CONC. ISLAND W/ BARRIERS (TYP. 4) SEE DET. 2/C403

APPROX LIMITS OF CH-47D CHINOOK

NEW 20-FT WIDE SLIDING CHAIN-LINK FENCE GATE SEE DET. 3/C400

NEW A.C. PAVEMENT SEE DETAIL 3/C403

CONCRETE PAD SEE UTILITY PLAN

EXIST. BUILDING 30

INSTALL NEW 4" WHITE STRIPING R=60'

INSTALL NEW 6" CURB

NEW CONCRETE WASH RACK SEE STRUCT DWGS

GRADE CONTROL LINE SEE GRADING PLAN

PROTECT IN-PLACE EXIST. STRIPING

RESTORE EXIST. SHOULDER STRIPING, TYP.

EDGE OF NEW A.C. PAVEMENT

RESTORE EXIST. SHOULDER STRIPING, TYP.

LEGEND

NEW CONCRETE

NEW A.C. PAVEMENT

1/C100 SITE PLAN

1"=20'

SCALE: 1" = 20'

Okahara and Associates Inc.
CONSULTING ENGINEERS

CHARLES L. JURY
LICENSED PROFESSIONAL ENGINEER
NO. 13190-C
HAWAII, U.S.A.
THIS WORK WAS PREPARED BY ME OR UNDER MY SUPERVISION AND CONSTRUCTION OBSERVATION WAS PERFORMED BY ME OR UNDER MY SUPERVISION.
SIGNATURE 4/30/2020 LICENSE EXPIRES

SYM	DESCRIPTION	DATE	APPR

SUBMITTAL PHASE: BID SET

SUBMITTAL DATE: 03/23/2020

DES CLJ DRW AHN CHK CLJ

DEPARTMENT OF DEFENSE
DESIGN AND PROJECT MANAGEMENT BRANCH
KALAELOA
OAHU

HAWAII ARMY NATIONAL GUARD

ARMY AVIATION SUPPORT FACILITY BUILDING 30

SITE PLAN

STATE OF HAWAII
FACILITY MANAGEMENT OFFICE

SCALE: AS NOTED

STATE JOB NO. CA-1825-C

FEDERAL PROJECT NO. 15190024

SHEET 8 OF 57

C100

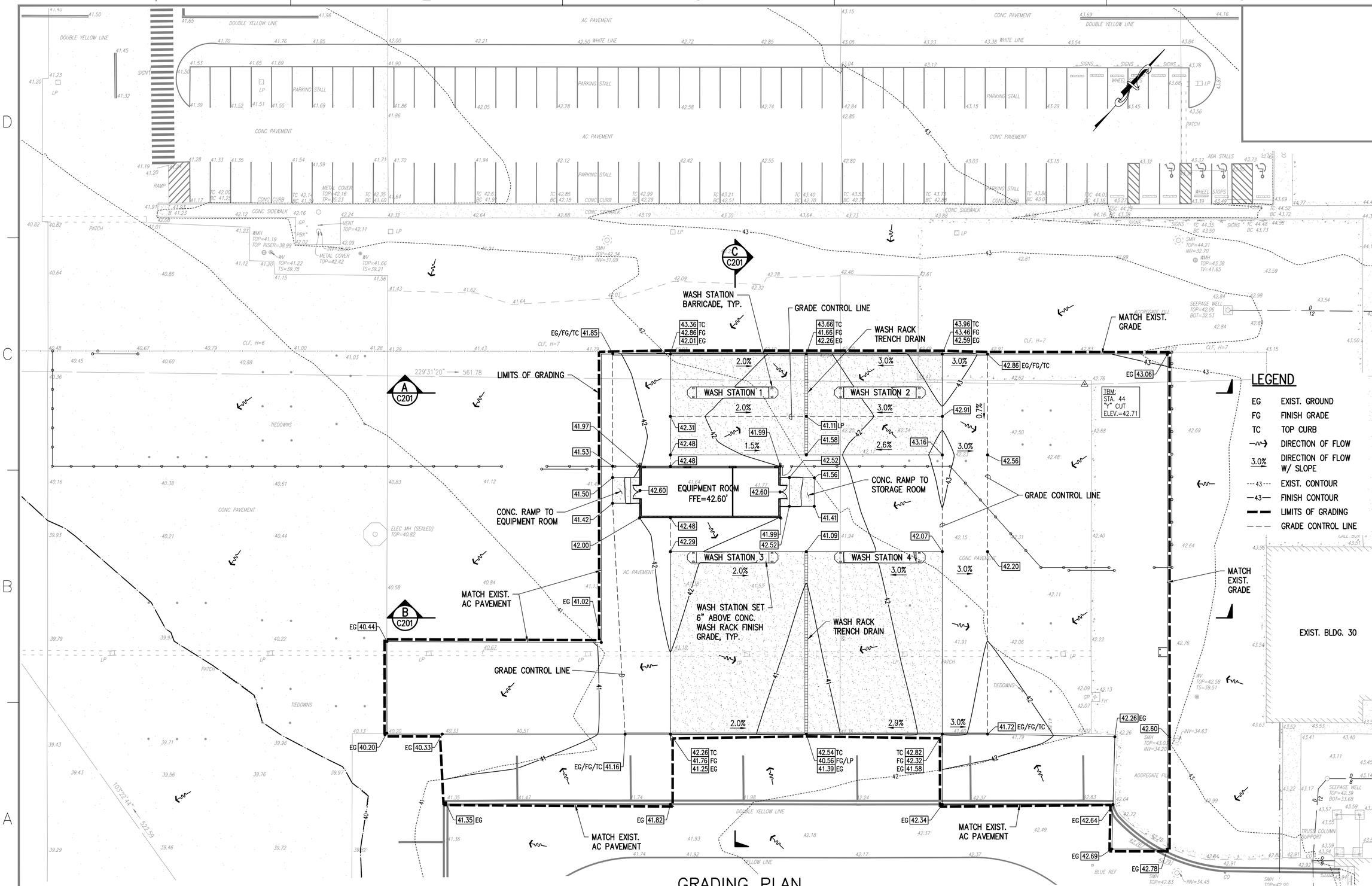

GRADING PLAN

SCALE: 1"=20'

HAWAII ARMY NATIONAL GUARD

Okahara and Associates Inc.
CONSULTING ENGINEERS

CHARLES L. JURY
LICENSED PROFESSIONAL ENGINEER
NO. 13190-C
HAWAII USA

THIS WORK WAS PREPARED BY ME OR UNDER MY SUPERVISION AND CONSTRUCTION OF IMPROVEMENTS WILL BE SUPERVISED BY ME.

SIGNATURE 03/30/2020 LICENSE EXPIRES

SYM	DESCRIPTION	DATE	APPR

SUBMITTAL PHASE: BID SET

SUBMITAL DATE: 03/23/2020

DES CLJ | DRW CLJ | CHK CLJ

DEPARTMENT OF DEFENSE
DESIGN AND PROJECT MANAGEMENT BRANCH

KALAELOA
OAHU

HAWAII ARMY NATIONAL GUARD

STATE OF HAWAII
FACILITY MANAGEMENT OFFICE

ARMY AVIATION SUPPORT FACILITY BUILDING 30

GRADING PLAN

SCALE: AS NOTED

STATE JOB NO. CA-1825-C

FEDERAL PROJECT NO. 15190024

SHEET 9 OF 57

C200

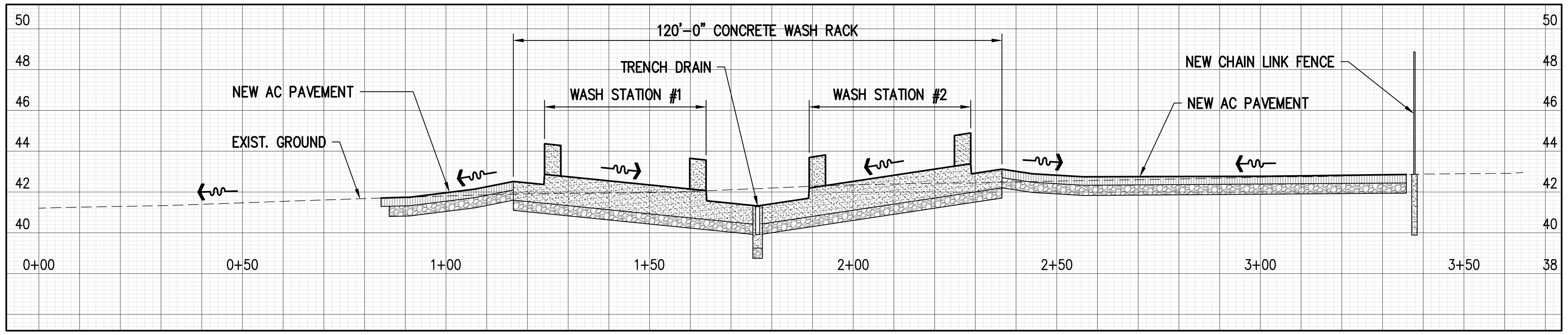

SECTION "A"

A / C201

SCALE: 1"=20' (HORIZONTAL)
1"=4' (VERTICAL)

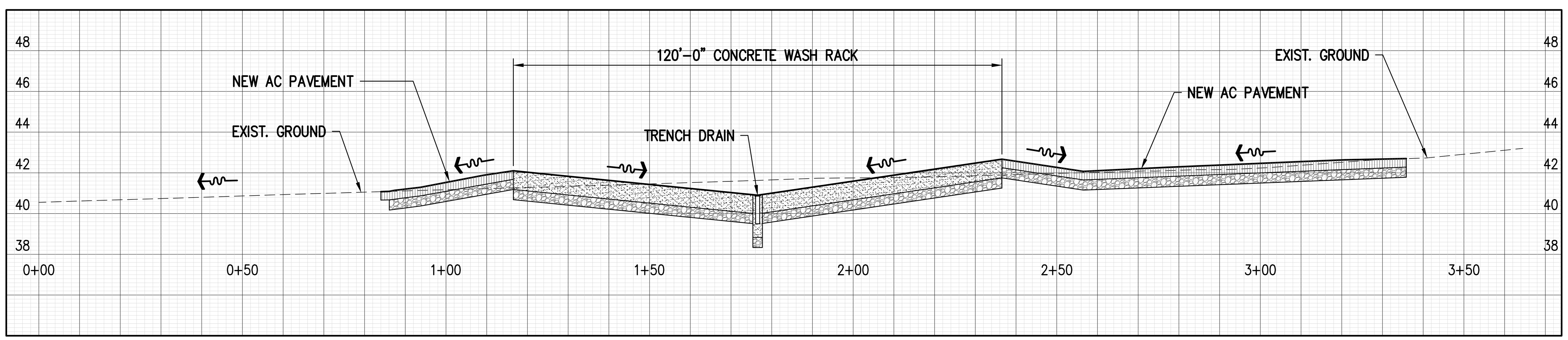

SECTION "B"

B / C201

SCALE: 1"=20' (HORIZONTAL)
1"=4' (VERTICAL)

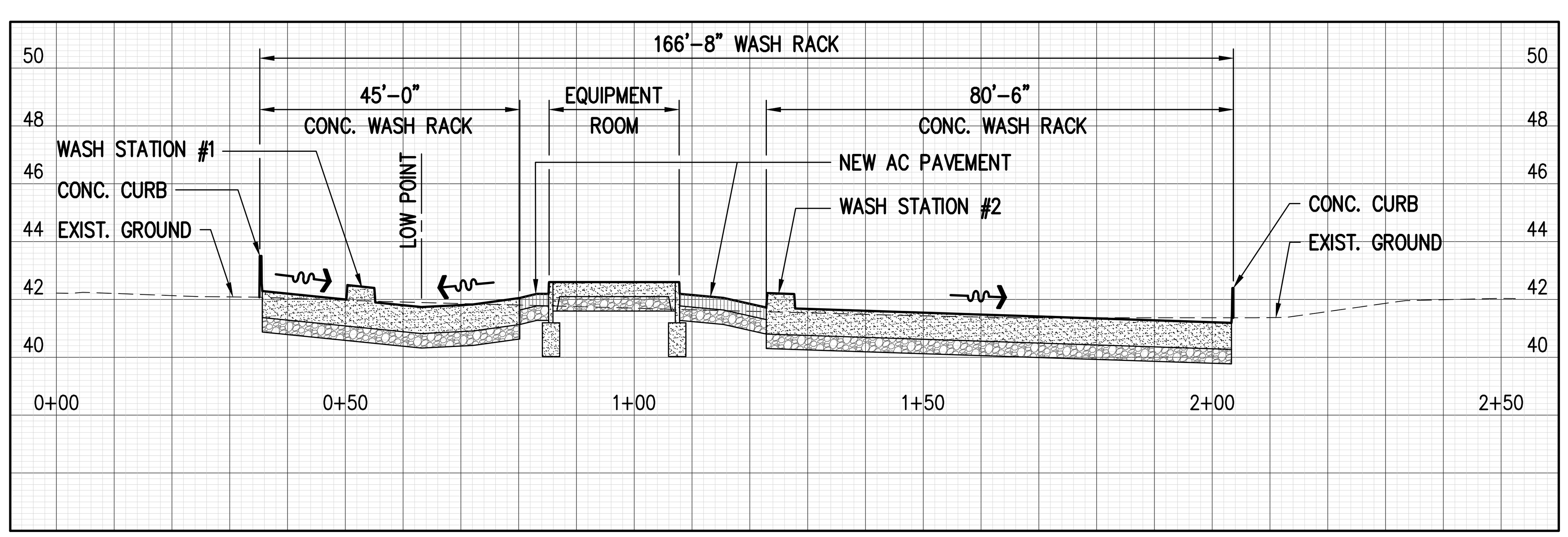

SECTION "C"

C / C201

SCALE: 1"=20' (HORIZONTAL)
1"=4' (VERTICAL)

SCALE: 1" = 20' — 20' 10' 0 20' 40'

SCALE: 1" = 4' — 4' 2' 0 4' 8'

Okahara and Associates Inc.
CONSULTING ENGINEERS

CHARLES L. JURY
LICENSED PROFESSIONAL ENGINEER
NO. 13190-C
HAWAII, USA

THIS WORK WAS PREPARED BY ME OR UNDER MY SUPERVISION AND CONSTRUCTION OF THIS PROJECT WILL BE UNDER MY OBSERVATION.

SIGNATURE — 4/30/2020 — LICENSE EXPIRES

SYM	DESCRIPTION	DATE	APPR

SUBMITTAL PHASE: BID SET

SUBMITTAL DATE: 03/23/2020

DES: CLJ | DRW: CLJ | CHK: CLJ

STATE OF HAWAII
FACILITY MANAGEMENT OFFICE

DEPARTMENT OF DEFENSE
DESIGN AND PROJECT MANAGEMENT BRANCH

HAWAII ARMY NATIONAL GUARD

KALAELOA
OAHU

ARMY AVIATION
SUPPORT FACILITY BUILDING 30

CROSS-SECTIONS

SCALE: AS NOTED

STATE JOB NO.: CA-1825-C

FEDERAL PROJECT NO.: 15190024

SHEET 10 OF 57

C201

CONNECT NEW SEWER LINE TO EXIST SEWER MANHOLE

EXIST. 8" SEWER LINE

EXIST. SEWER PUMP STATION

CONNECT NEW 2" WATER LINE TO EXIST. 12" WATER LINE. INSTALL NEW DIRECT TAP 2" SERVICE LINE W/ BALL CORP.

EXIST. 12" WATER LINE

NEW 6" SEWER LINE

NEW TRENCH DRAIN (TYP.) SEE DWG. C405

NEW 37' X 75' ABSORPTION BED W/ STORMTECH MC-3500 CHAMBERS BY ADVANCED DRAINAGE SYSTEMS, INC. OR APPROVED EQUAL SEE DET. 1/C401

NEW 2" WATER LINE

INSTALL NEW BACKFLOW PREVENTER SEE DET. 1/C402

SEE MECH DWGS. FOR CONTINUATION

NEW 12" DRAIN LINE

NEW OIL WATER SEPARATOR. SEE MECH DWGS.

EQUIPMENT ROOM

NEW DIVERTER VALVE SEE DETAIL 1/C403

NEW SEWER CONNECTION TO EQUIPMENT ROOM SEE MECH DWGS FOR CONTINUATION

NEW DIVERTER BOX SEE DETAIL 1/C403

NEW SEWER COTG SEE DET. 3/C402

NEW 12" DRAIN LINE

NEW 12" DRAIN LINE

RELOCATED FIRE HYDRANT WITH TWO (2) GUARD POSTS WITHIN 4'X4'X4" CONC SLAB

NEW 6" WATER LINE

CUT AND PLUG EXIST. 6" WATER LINE

CONNECT NEW 6" WATER LINE TO EXIST 6" WATER LINE. INSTALL
1-6" 1/4 BEND
1-6" SLEEVE, 18" LONG
3 L.F. 6" PIPE
1-CONC. BLOCK

TBM: STA. 4+ "V" CUT ELEV.=42.71

SCALE: 1" = 20'

20' 10' 0 20' 40'

1/C300 UTILITY PLAN
1"=20'

Okahara and Associates Inc.
CONSULTING ENGINEERS

CHARLES L. JURY
LICENSED PROFESSIONAL ENGINEER
NO. 13190-C
HAWAII USA
THIS WORK WAS PREPARED BY ME OR UNDER MY SUPERVISION AND CONSTRUCTION OF IMPROVEMENTS WILL BE UNDER MY OBSERVATION.
SIGNATURE 06/30/2020 LICENSE EXPIRES

SYM	DESCRIPTION	DATE	APPR

SUBMITTAL PHASE: BID SET

SUBMITTAL DATE: 03/23/2020

DES CLJ | DRW AHN | CHK CLJ

DEPARTMENT OF DEFENSE
DESIGN AND PROJECT MANAGEMENT BRANCH
KALAELOA OAHU

HAWAII ARMY NATIONAL GUARD

STATE OF HAWAII
FACILITY MANAGEMENT OFFICE

ARMY AVIATION SUPPORT FACILITY BUILDING 30

UTILITY PLAN

SCALE: AS NOTED

STATE JOB NO. CA-1825-C

FEDERAL PROJECT NO. 15190024

SHEET 11 OF 57

C300

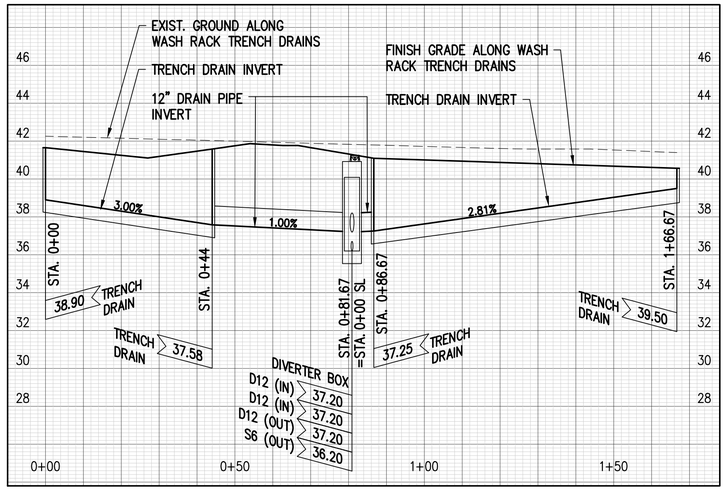

1 C301 PROFILE – WASH RACK TRENCH DRAIN

SCALE: 1"=20' (HORIZONTAL)
1"=4' (VERTICAL)

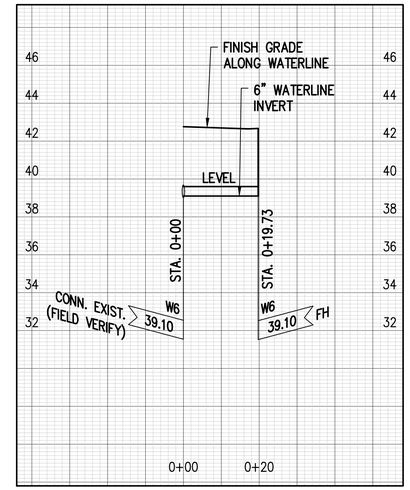

2 C301 PROFILE – FIRE HYDRANT

SCALE: 1"=20' (HORIZONTAL)
1"=4' (VERTICAL)

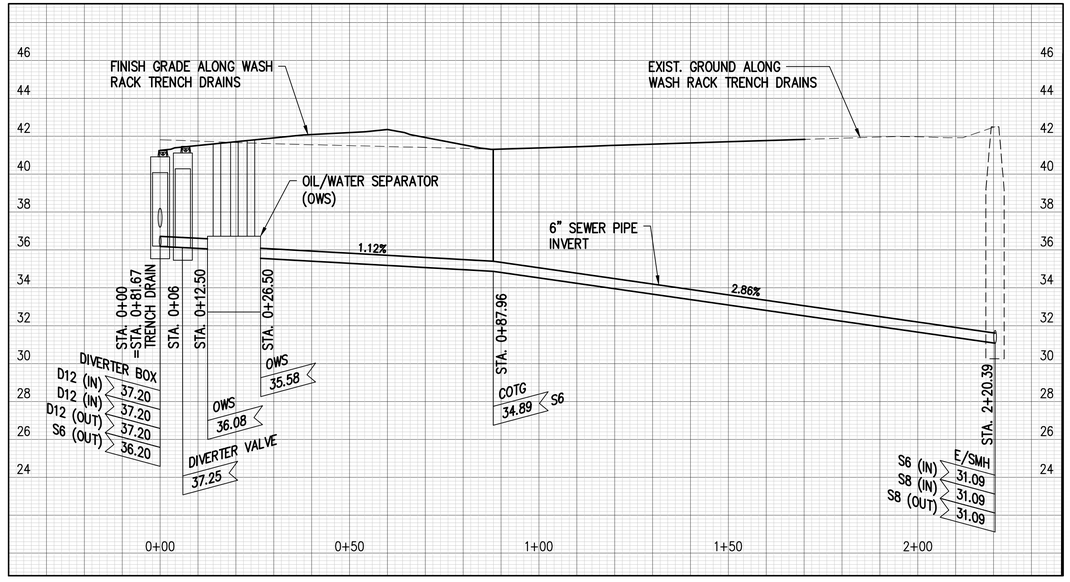

3 C301 PROFILE – SEWER LINE

SCALE: 1"=20' (HORIZONTAL)
1"=4' (VERTICAL)

SCALE: 1" = 20' 20' 10' 0 20' 40'

SCALE: 1" = 4' 4' 2' 0 4' 8'

Okahara and Associates Inc.
CONSULTING ENGINEERS

CHARLES L. JURY
LICENSED PROFESSIONAL ENGINEER
NO. 13190-C
HAWAII USA

THIS WORK WAS PREPARED BY ME OR UNDER MY SUPERVISION AND CONSTRUCTION OF THIS PROJECT WILL BE SUPERVISED BY ME OR UNDER MY SUPERVISION.

SIGNATURE 4/30/2020 LICENSE EXPIRES

SYM	DESCRIPTION	DATE	APPR

SUBMITTAL PHASE: BID SET

SUBMITTAL DATE: 03/23/2020

DES CLJ DRW CLJ CHK CLJ

STATE OF HAWAII
FACILITY MANAGEMENT OFFICE

DEPARTMENT OF DEFENSE
DESIGN AND PROJECT MANAGEMENT BRANCH

HAWAII ARMY NATIONAL GUARD

KALAELOA
OAHU

ARMY AVIATION SUPPORT FACILITY BUILDING 30

UTILITY PROFILES

SCALE: AS NOTED

STATE JOB NO. CA-1825-C

FEDERAL PROJECT NO. 15190024

SHEET 12 OF 57

C301

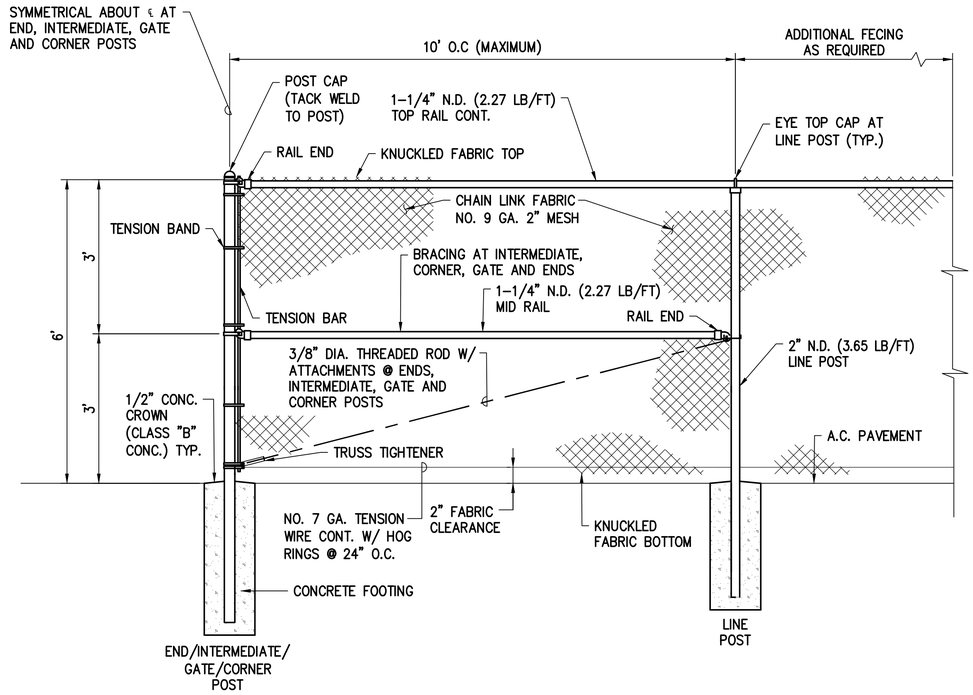

NOTES:

1. ALL PIPE AND POST SIZES ARE NOMINAL DIAMETER (N.D.).
2. CHAIN LINK FABRIC, PIPES, FITTING, FASTENERS, TRUSS ROD, POTS, HOG RINGS AND TENSION WIRE SHALL BE HOT-DIP GALVANIZED.
3. CHAIN LINK FABRIC SHALL BE CONTINUOUS AND FASTENED TO END, INTERMEDIATE, GATE AND CORNER POSTS BY TENSION BARS WITH TENSION BANDS EVENLY SPACED AT 15" O.C. (MAX.).
4. WIRE FASTENINGS SHALL BE NO. 12 GAUGE GALVANIZED TIE WIRE.
5. CHAIN LINK FABRIC SHALL BE FASTENED TO LINE POSTS WITH WIRE FASTENINGS EVENLY WITH 12" O.C. (MAX.).
6. CHAIN LINK FABRIC SHALL BE FASTENED TO HORIZONTAL RAILS WITH WIRE FASTENINGS EVENLY SPACED AT 12" (MAX.).
7. ALL WIRE FASTENING ENDS SHALL BE WRAPPED AROUND CHAIN LINK A MINIMUM OF ONE COMPLETE TURN. (HOOKING OF WIRE ENDS SHALL NOT BE PERMITTED).
8. CHAIN LINK FABRIC SHALL BE FASTENED TO TRUSS ROD WITH NO. 9 GAUGE HOG RINGS AT 12" O.C.
9. NO SPLICING SHALL BE ALLOWED ON ALL STRAIGHT-RUN PIPES.
10. TOP AND BOTTOM SELVAGES OF CHAIN LINK FABRIC SHALL BE KNUCKLED.
11. INSTALL INTERMEDIATE POSTS AT 200' MAX. INTERVALS AND AT TOP AND BOTTOM OF SLOPE.
12. ALL FIELD WELDS AND DAMAGED GALVANIZED SURFACES SHALL BE PAINTED WITH TWO COSTS OF Z.R.C. COLD GALVANIZING COMPOUND.
13. ALL FENCE POSTS SHALL BE INSTALLED EVENLY SPACED.
14. AFTER INSTALLATION, ALL BOLT ENDS SHALL BE CUT FLUSH WITH THE NUTS AND GROUND SMOOTH.

1 / C400 — 6' CHAINLINK FENCE DETAIL

NOT TO SCALE

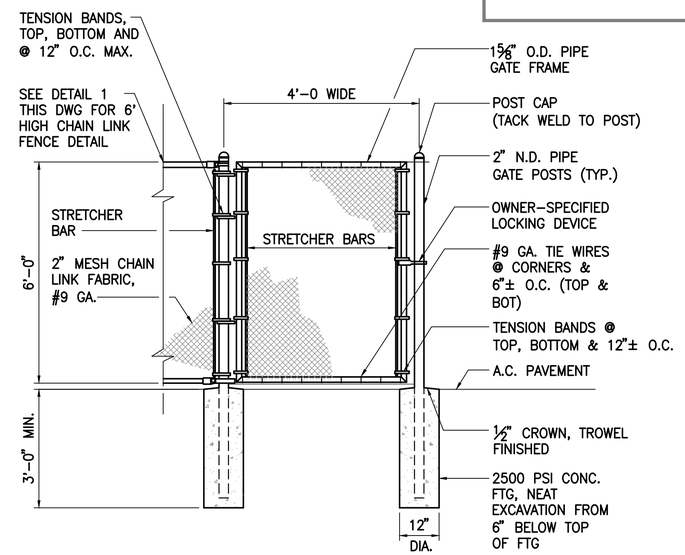

2 / C400 — PEDESTRIAN GATE DETAIL

NOT TO SCALE

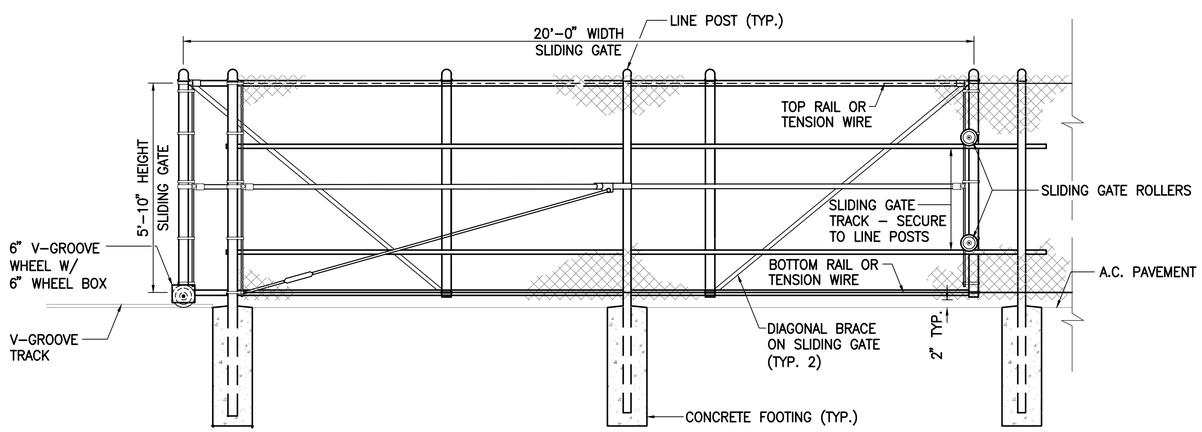

3 / C400 — 20' WIDE CHAIN LINK FENCE SLIDING GATE DETAIL

NOT TO SCALE

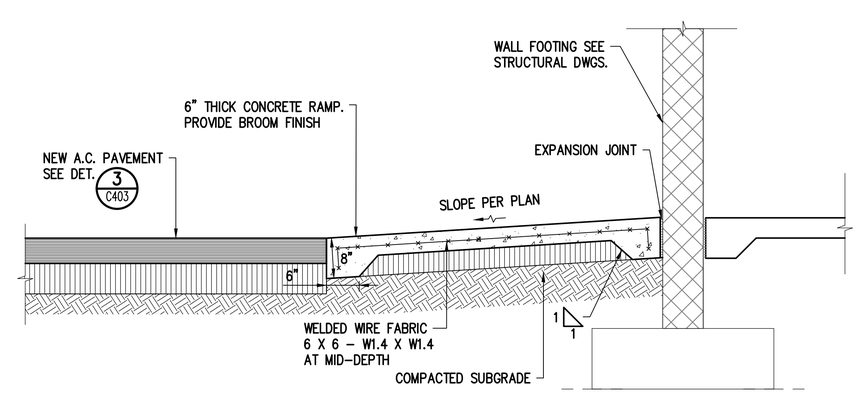

4 / C400 — CONCRETE RAMP DETAIL

NOT TO SCALE

Okahara and Associates Inc.
CONSULTING ENGINEERS

CHARLES L. JURY
LICENSED PROFESSIONAL ENGINEER
NO. 13190-C
HAWAII, U.S.A.
SIGNATURE — LICENSE EXPIRES 4/30/2020

SYM	DESCRIPTION	DATE	APPR

SUBMITTAL PHASE: BID SET
SUBMITTAL DATE: 03/23/2020
DES AHN | DRW MH | CHK CLJ

STATE OF HAWAII — FACILITY MANAGEMENT OFFICE
DEPARTMENT OF DEFENSE — DESIGN AND PROJECT MANAGEMENT BRANCH
HAWAII ARMY NATIONAL GUARD
KALAELOA OAHU
ARMY AVIATION SUPPORT FACILITY BUILDING 30
DETAILS - 1

SCALE: AS NOTED
STATE JOB NO. CA-1825-C
FEDERAL PROJECT NO. 15190024
SHEET 13 OF 57
C400

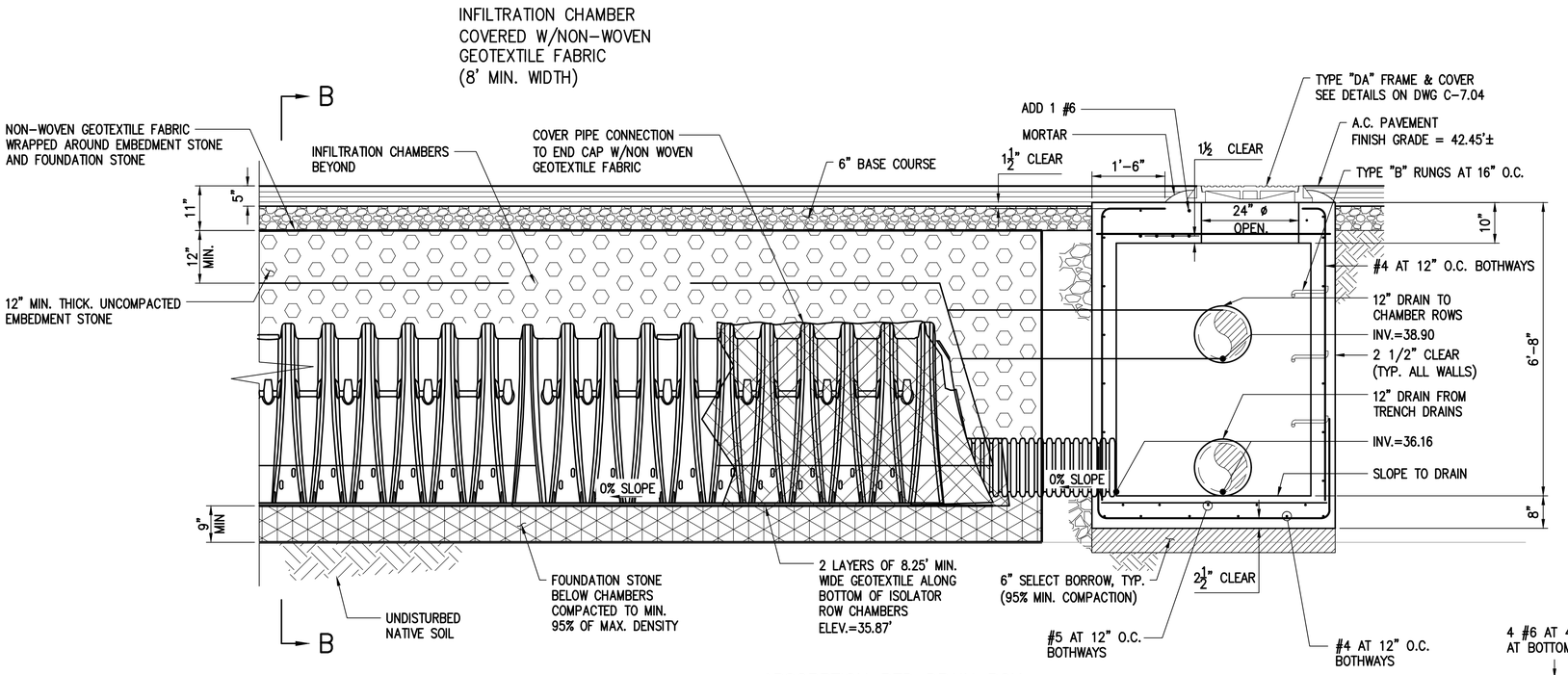

ABSORPTION BED DRAIN BOX

SECTION A-A

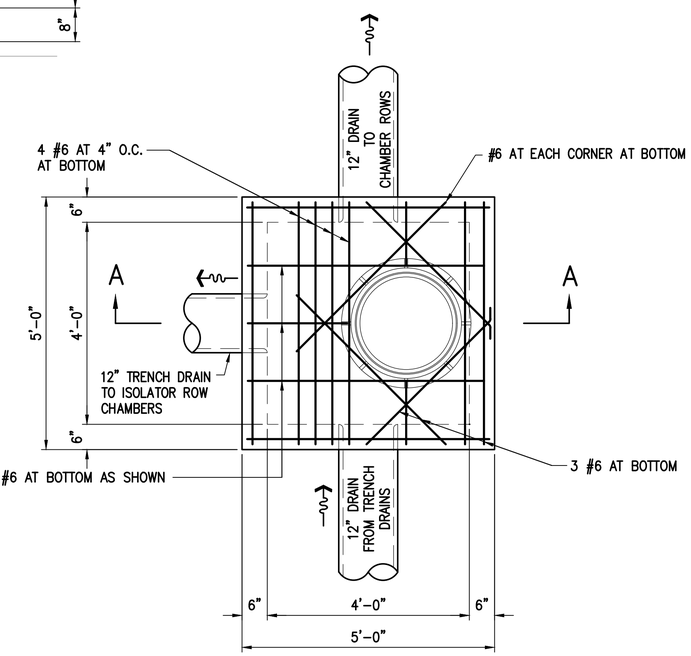

ABSORPTION BED DRAIN BOX

PLAN

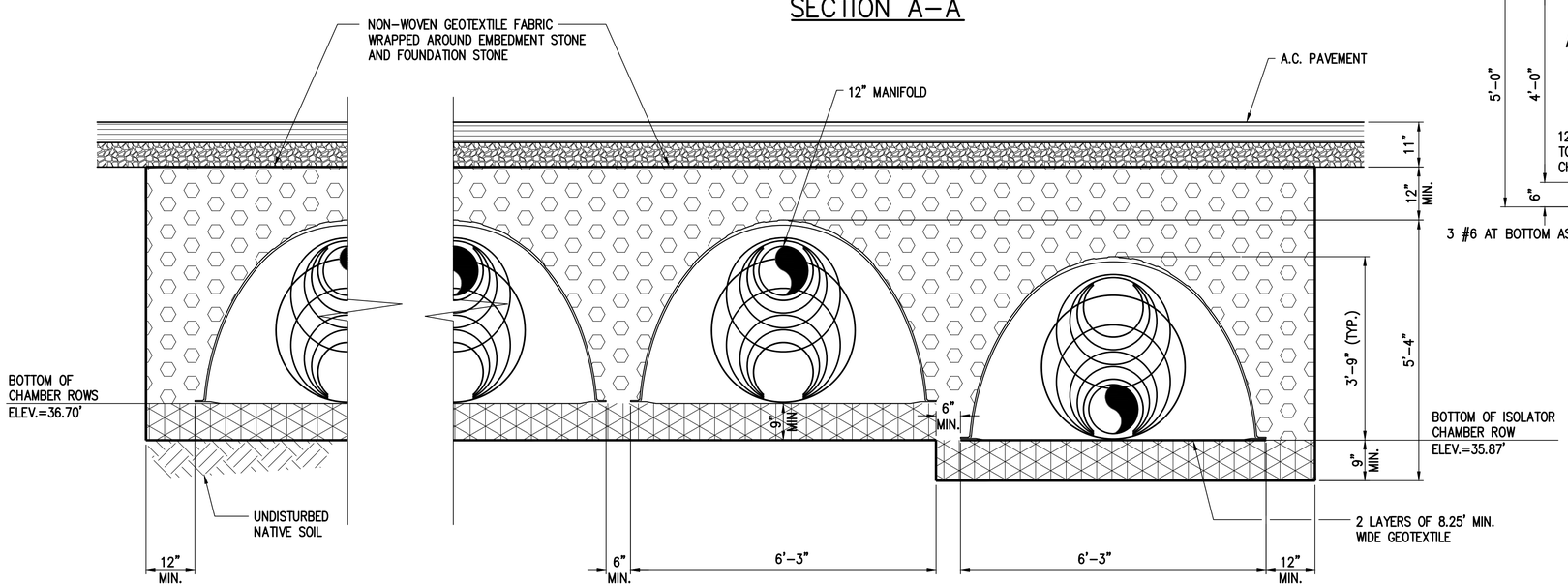

ABSORPTION BED DRAIN BOX

SECTION B-B

1 C401 ABSORPTION BED CHAMBER DETAIL

NOT TO SCALE

HAWAII ARMY NATIONAL GUARD

Okahara and Associates Inc.
CONSULTING ENGINEERS

CHARLES L. JURY
LICENSED PROFESSIONAL ENGINEER
NO. 13190-C
HAWAII USA

THIS WORK WAS PREPARED BY ME OR UNDER MY SUPERVISION AND CONSTITUTES MY PROFESSIONAL WORK AS A PROFESSIONAL ENGINEER.

SIGNATURE 4/30/2020 LICENSE EXPIRES

SYM	DESCRIPTION	DATE	APPR

SUBMITTAL PHASE: BID SET

SUBMITTAL DATE: 03/23/2020

DES AHN | DRW AHN | CHK CLJ

DEPARTMENT OF DEFENSE
DESIGN AND PROJECT MANAGEMENT BRANCH

STATE OF HAWAII
FACILITY MANAGEMENT OFFICE

HAWAII ARMY NATIONAL GUARD

KALAELOA
OAHU

ARMY AVIATION
SUPPORT FACILITY BUILDING 30

DETAILS - 2

SCALE: AS NOTED

STATE JOB NO. CA-1825-C

FEDERAL PROJECT NO. 15190024

SHEET 14 OF 57

C401

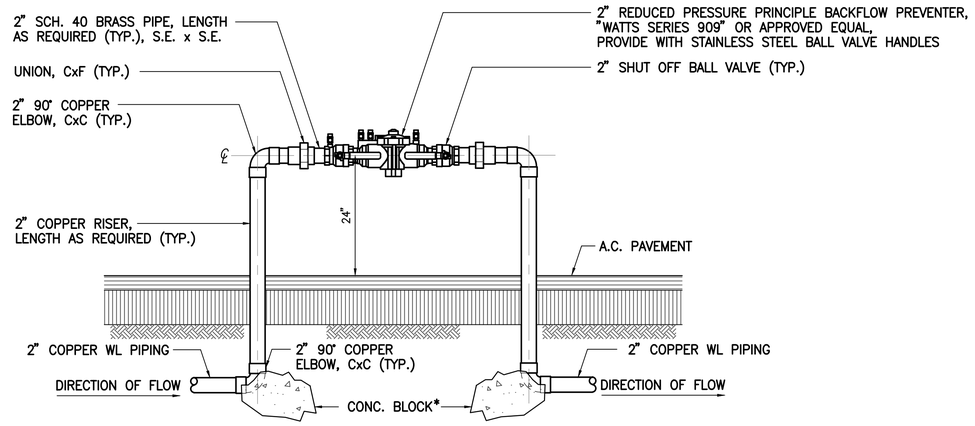

*NOTE: PROVIDE 2 SQ. FT. BEARING AREA FOR EACH CONC. BLOCK

1 / C402 BACKFLOW PREVENTER DETAIL

NOT TO SCALE

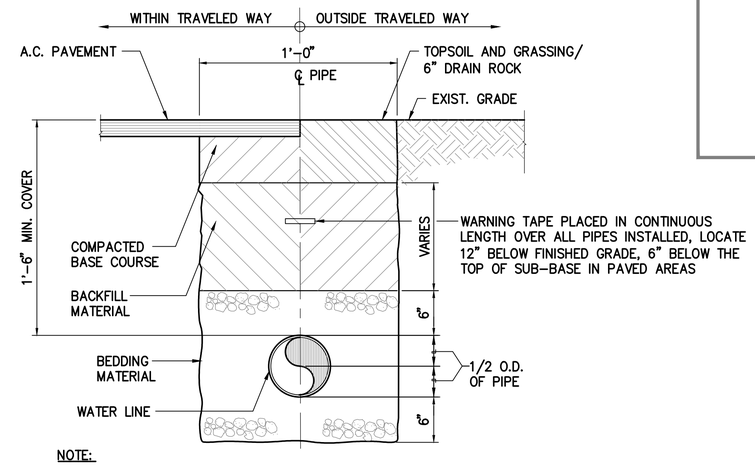

NOTE:

1. PROVIDE BEDDING IN ACCORDANCE WITH THE SPECIFICATIONS

2 / C402 WATER LINE TRENCH DETAIL

NOT TO SCALE

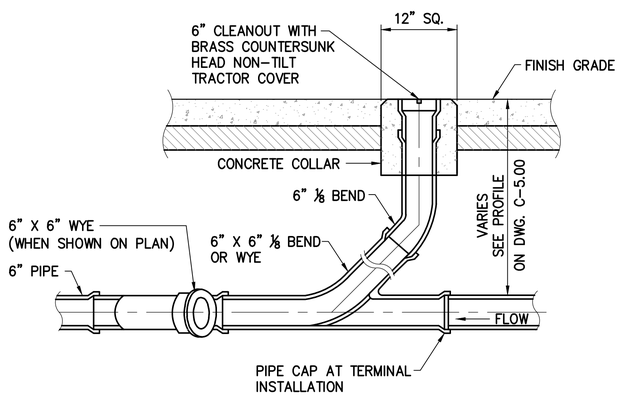

3 / C402 SEWER CLEAN OUT TO GRADE DETAIL

NOT TO SCALE

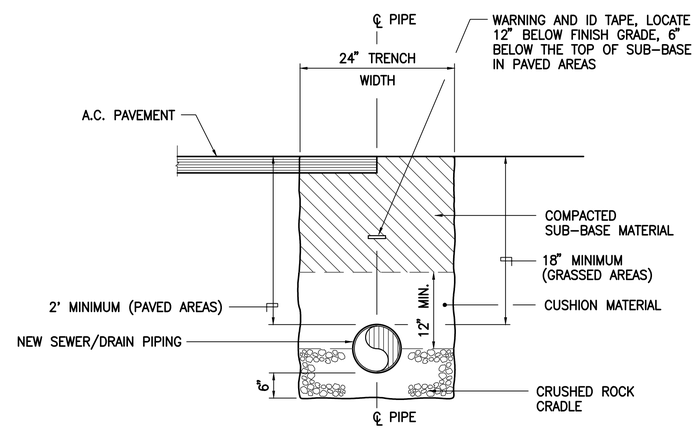

4 / C402 SEWER/DRAIN LINE TRENCH DETAIL

NOT TO SCALE

Okahara and Associates Inc.
CONSULTING ENGINEERS

CHARLES L. JURY
LICENSED PROFESSIONAL ENGINEER
NO. 13190-C
HAWAII USA

THIS WORK WAS PREPARED BY ME OR UNDER MY SUPERVISION AND CONSTITUTES MY ACCEPTANCE OF RESPONSIBILITY IN ACCORDANCE WITH STANDARD PROFESSIONAL PRACTICE.

SIGNATURE — LICENSE EXPIRES 4/30/2020

SYM	DESCRIPTION	DATE	APPR

SUBMITTAL PHASE: BID SET

SUBMITTAL DATE: 03/23/2020

DES AHN | DRW MH | CHK CLJ

DEPARTMENT OF DEFENSE
DESIGN AND PROJECT MANAGEMENT BRANCH
STATE OF HAWAII
FACILITY MANAGEMENT OFFICE

HAWAII ARMY NATIONAL GUARD
KALAELOA OAHU

ARMY AVIATION SUPPORT FACILITY BUILDING 30

DETAILS – 3

SCALE: AS NOTED

STATE JOB NO. CA-1825-C

FEDERAL PROJECT NO. 15190024

SHEET 15 OF 57

C402

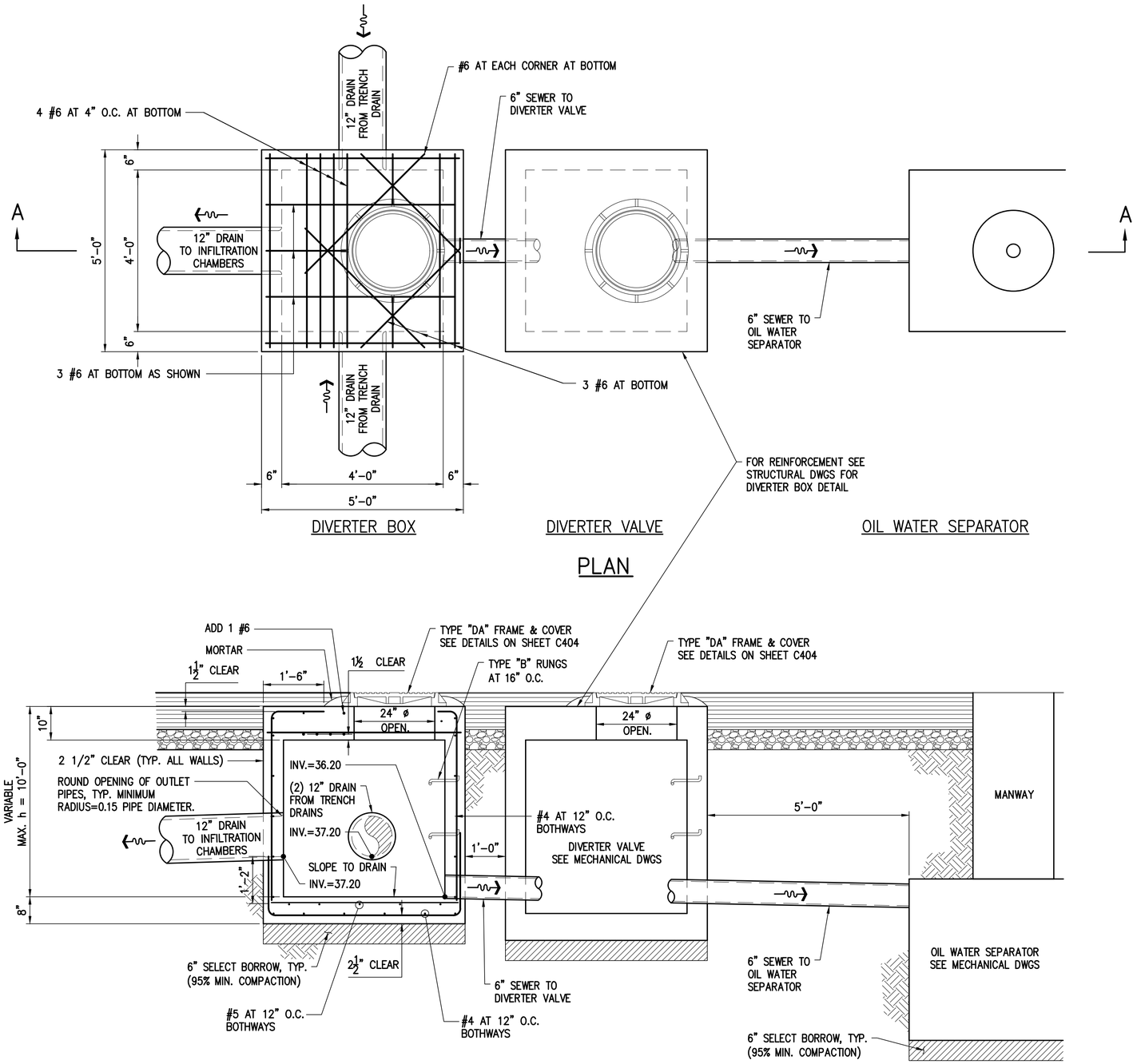

1 C403 DRAIN BOX DETAIL

NOT TO SCALE

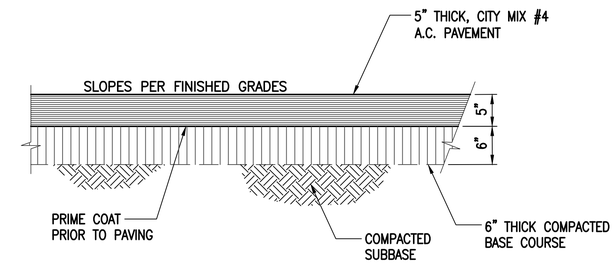

3 C403 A.C. PAVEMENT DETAIL

NOT TO SCALE

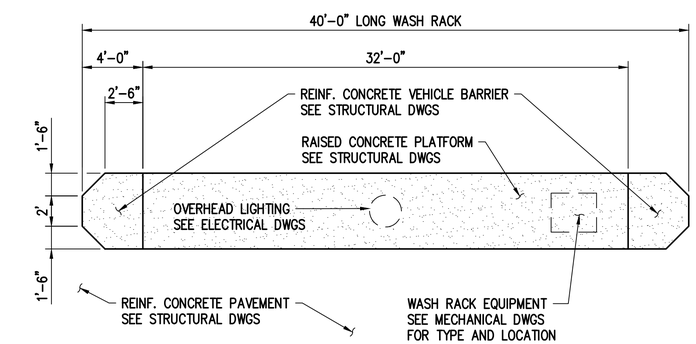

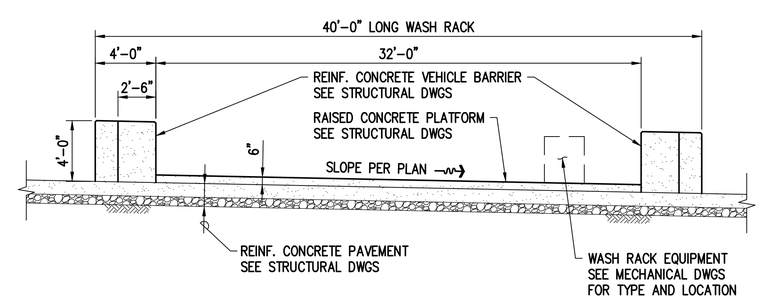

2 C403 TYPICAL WASH STATION PLAN AND ELEVATION DETAIL

NOT TO SCALE

Okahara and Associates Inc.
CONSULTING ENGINEERS

CHARLES L. JURY
LICENSED PROFESSIONAL ENGINEER
NO. 13190-C
HAWAII USA

SIGNATURE — LICENSE EXPIRES 4/30/2020

SYM	DESCRIPTION	DATE	APPR

SUBMITTAL PHASE: BID SET

SUBMITTAL DATE: 03/23/2020

DES AHN | DRW MH | CHK CLJ

DEPARTMENT OF DEFENSE
DESIGN AND PROJECT MANAGEMENT BRANCH
STATE OF HAWAII
FACILITY MANAGEMENT OFFICE

HAWAII ARMY NATIONAL GUARD
KALAELOA OAHU

ARMY AVIATION SUPPORT FACILITY BUILDING 30

DETAILS – 4

SCALE: AS NOTED

STATE JOB NO. CA-1825-C

FEDERAL PROJECT NO. 15190024

SHEET 16 OF 57

C403

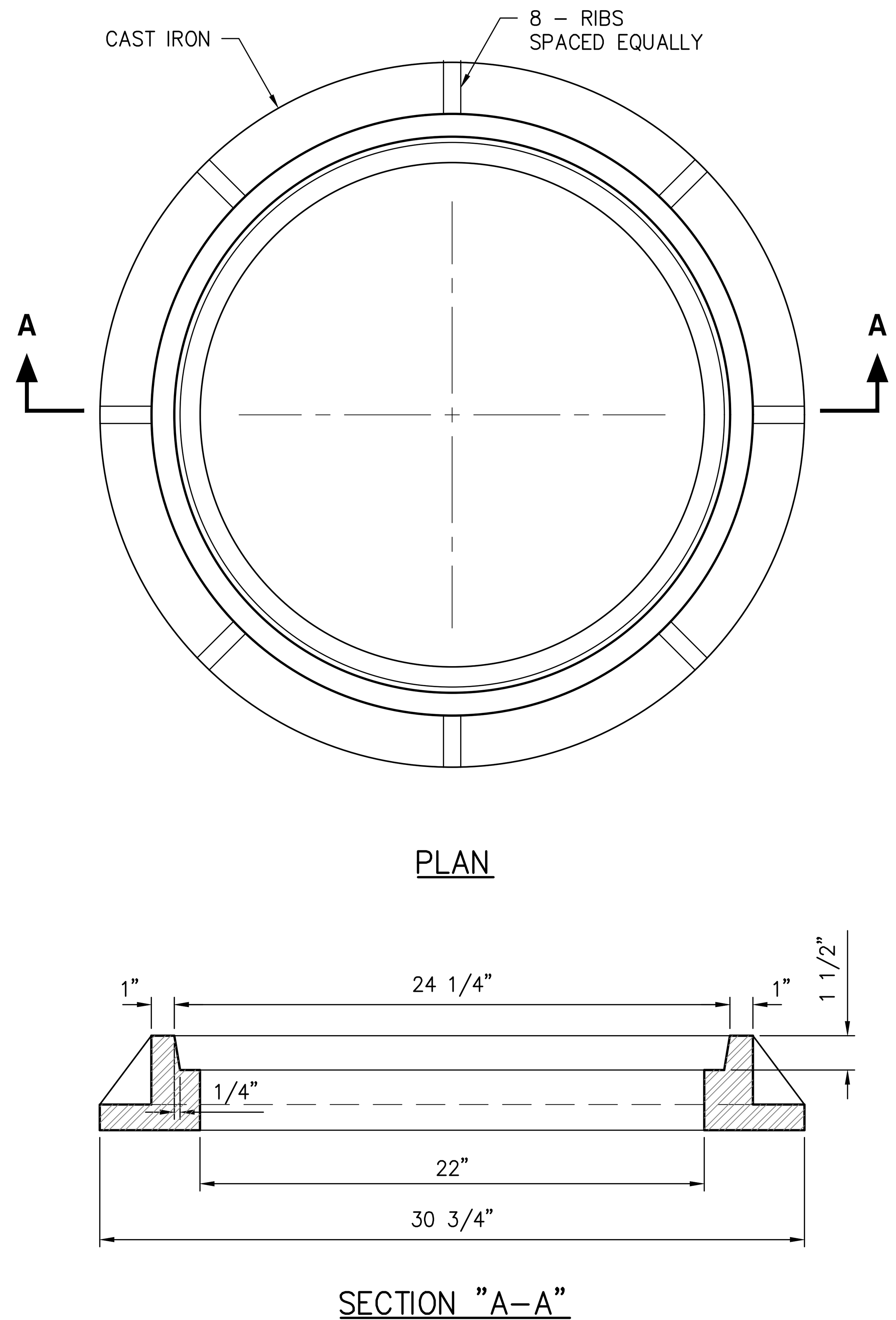

1 C404 TYPE "DA" MANHOLE FRAME DETAIL

NOT TO SCALE

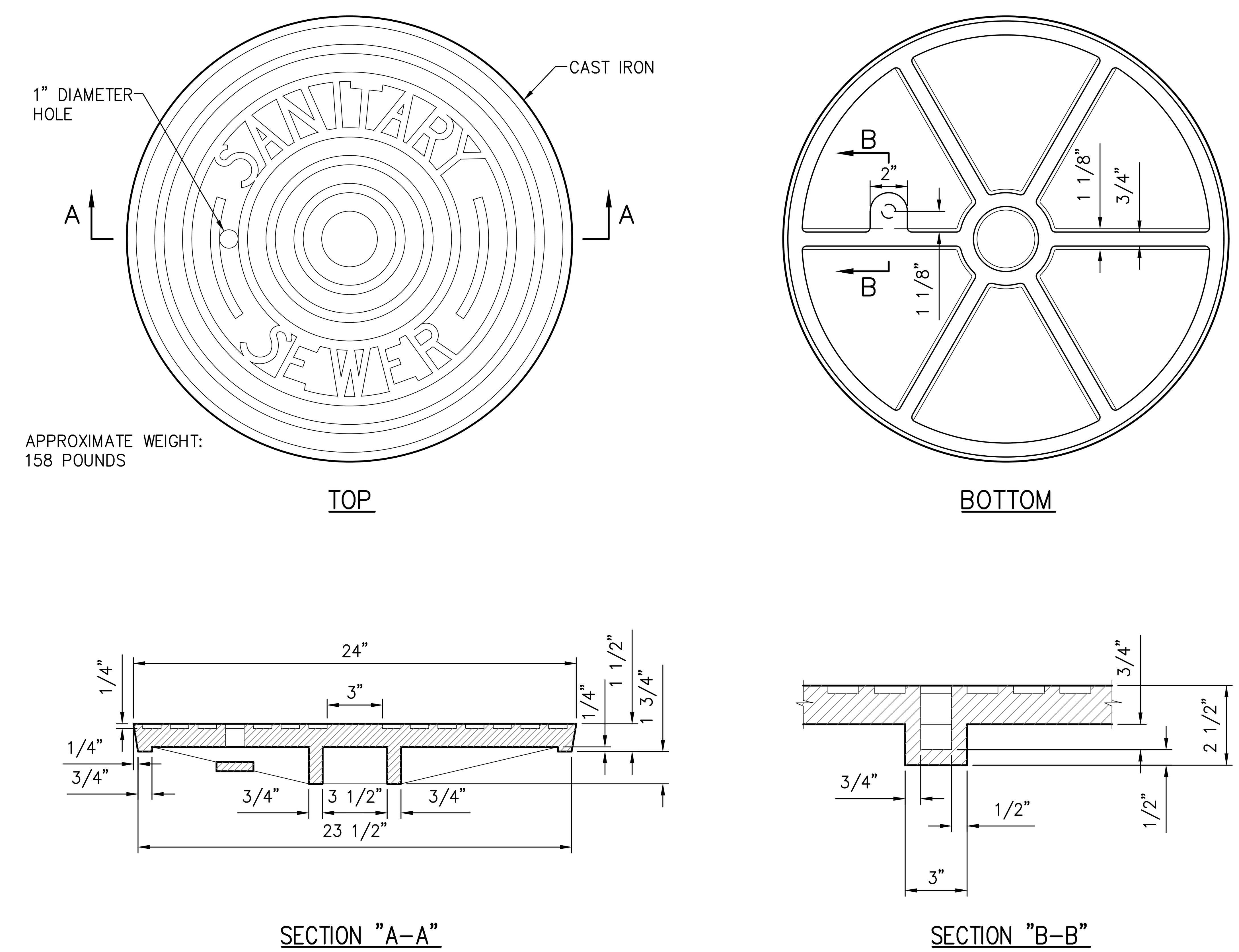

2 C404 TYPE "DA" MANHOLE COVER DETAIL

NOT TO SCALE

Okahara and Associates Inc.
CONSULTING ENGINEERS

CHARLES L. JURY
LICENSED PROFESSIONAL ENGINEER
NO. 13190-C
HAWAII, USA

THIS WORK WAS PREPARED BY ME OR UNDER MY SUPERVISION AND CONSTRUCTION OF THIS PROJECT WILL BE UNDER MY OBSERVATION.

SIGNATURE 04/30/2020 LICENSE EXPIRES

SYM	DESCRIPTION	DATE	APPR

SUBMITTAL PHASE: BID SET

SUBMITTAL DATE: 03/23/2020

DES AHN DRW MH CHK CLJ

STATE OF HAWAII
FACILITY MANAGEMENT OFFICE

DEPARTMENT OF DEFENSE
DESIGN AND PROJECT MANAGEMENT BRANCH

HAWAII ARMY NATIONAL GUARD

KALAELOA OAHU

ARMY AVIATION SUPPORT FACILITY BUILDING 30

DETAILS – 5

SCALE: AS NOTED

STATE JOB NO. CA-1825-C

FEDERAL PROJECT NO. 15190024

SHEET 17 OF 57

C404

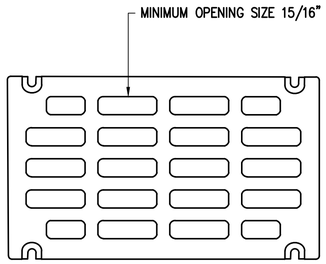

1 C405 GRATE DETAIL

NOT TO SCALE

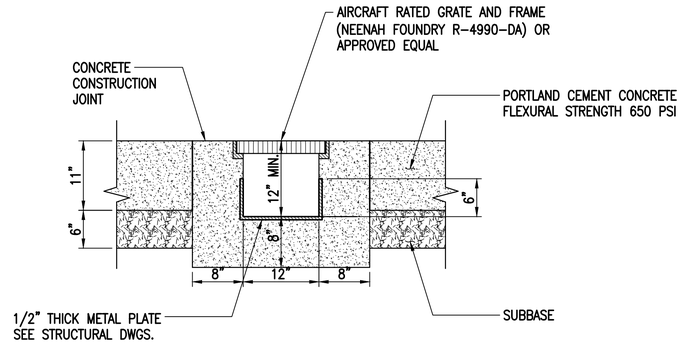

2 C405 TRENCH DRAIN SECTION DETAIL

NOT TO SCALE

Okahara and Associates Inc.
CONSULTING ENGINEERS

CHARLES L. JURY
LICENSED PROFESSIONAL ENGINEER
NO. 13190-C
HAWAII USA

THIS WORK WAS PREPARED BY ME OR UNDER MY SUPERVISION AND CONSIDERED TO BE CORRECT TO THE BEST OF MY KNOWLEDGE

SIGNATURE 4/30/2020 LICENSE EXPIRES

SYM	DESCRIPTION	DATE	APPR

SUBMITTAL PHASE: BID SET

SUBMITTAL DATE: 03/23/2020

DES AHN | DRW MH | CHK CLJ

STATE OF HAWAII
FACILITY MANAGEMENT OFFICE

HAWAII ARMY NATIONAL GUARD
DEPARTMENT OF DEFENSE
DESIGN AND PROJECT MANAGEMENT BRANCH

KALAELOA
OAHU

ARMY AVIATION SUPPORT FACILITY BUILDING 30

DETAILS – 6

SCALE: AS NOTED

STATE JOB NO. CA-1825-C

FEDERAL PROJECT NO. 15190024

SHEET 18 OF 57

C405

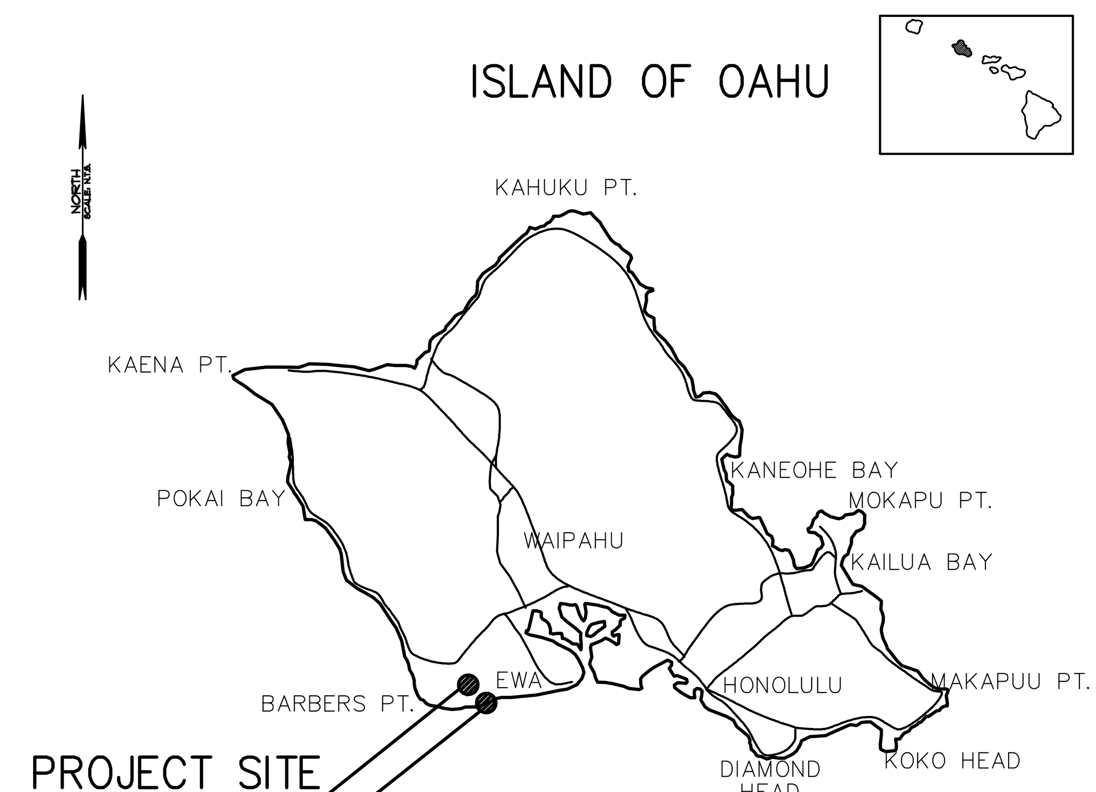

RECIEVING WATER:
NIMITZ BEACH
21.3003'N, 158.0583'W
CLASS A, MARINE

VICINITY MAP
SCALE: N.T.S.

LIST OF REQUIRED BEST MANAGEMENT PRACTICES			
BEST MANAGEMENT PRACTICE	PRE-CONSTRUCTION	DURING CONSTRUCTION	POST-CONSTRUCTION
BMP AND SITE MAINTENANCE		X	
MATERIAL DELIVERY, STORAGE AND USE BMPs		X	
STOCKPILE MANAGEMENT BMPs		X	
SPILL PREVENTION AND CONTROL BMPs		X	
SOLID WASTE MANAGEMENT BMPs		X	
HAZARDOUS WASTE MANAGEMENT BMPs		X	
CONCRETE WASTE MANAGEMENT BMPs		X	
SANITARY/SEPTIC WASTE MANAGEMENT BMPs		X	
LIQUID WASTE MANAGEMENT BMPs		X	
VEHICLE AND EQUIPMENT CLEANING, FUELING, AND MAINTENANCE BMPs		X	
TRACKING CONTROL		X	
STABILIZED CONSTRUCTION ENTRANCE AND EXIT	X	X	
SILT FENCE/FILTER SOCK	X	X	
PERMANENT STABILIZATION			X
DUST CONTROL		X	
SEDIMENT TRAP	X	X	

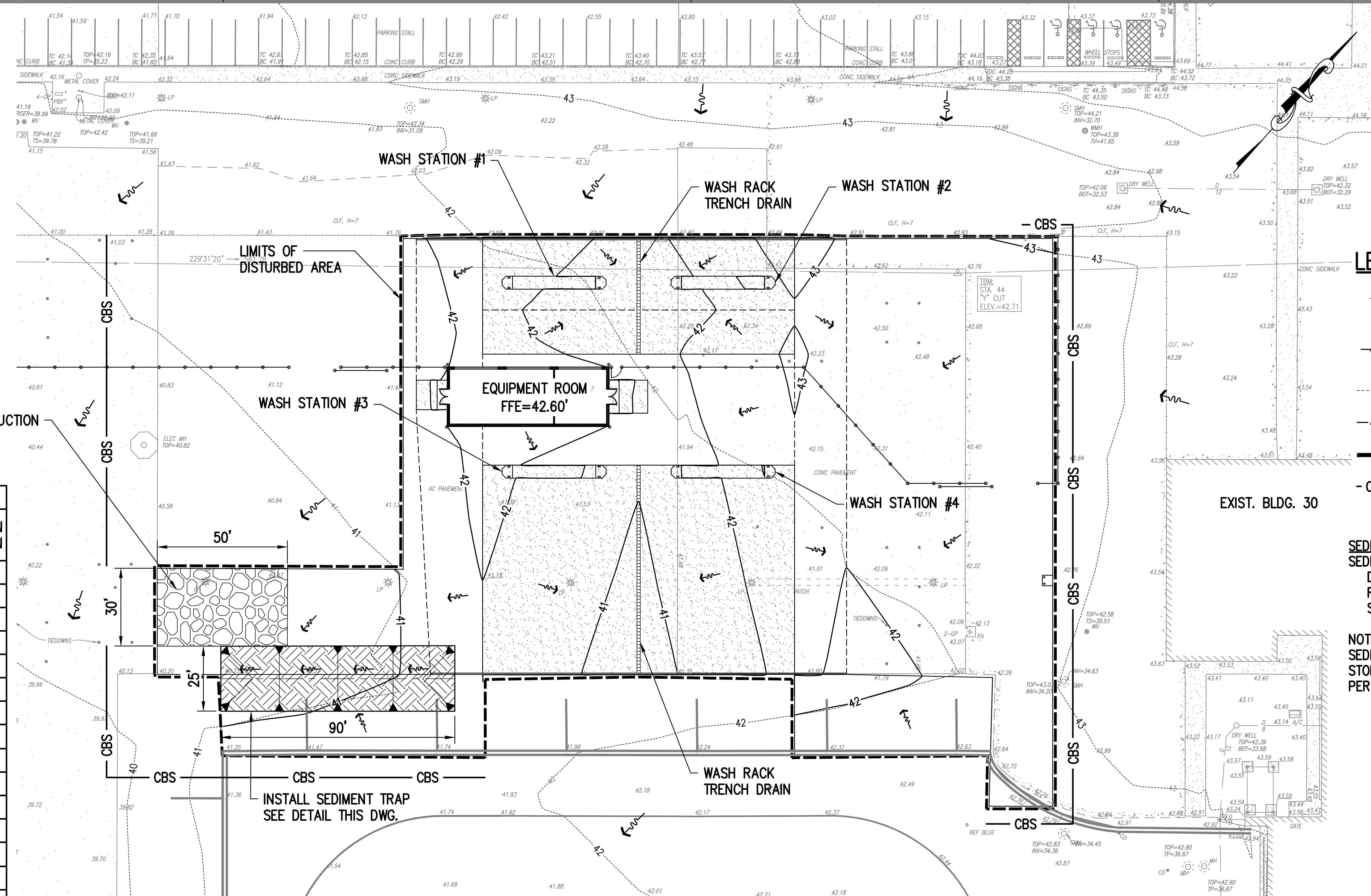

LEGEND

- DIRECTION OF FLOW INSIDE OF LIMITS OF DISTURBANCE
- DIRECTION OF FLOW OUTSIDE OF LIMITS OF DISTURBANCE
- ---43--- EXIST. CONTOUR
- —43— FINISH CONTOUR
- LIMITS OF DISTURBED AREA
- -CBS- COMPOST BIOFILTER SOCK

SEDIMENT TRAP SUMMARY
SEDIMENT TRAP NO. 1:
DRAINAGE AREA: 1.2 ACRES
REQUIRED CAPACITY: 4,320 CU. FT.
SEDIMENT TRAP CAPACITY: 4,691 CU. FT.

NOTE:
SEDIMENT TRAP DESIGNED TO PROVIDE STORAGE FOR A MINIMUM OF 3,600 CU. FT. PER ACRE OF RUNOFF.

EROSION AND SEDIMENT CONTROL PLAN
SCALE: 1" = 30'

SCALE: 1" = 30' (30' 15' 0 30' 60')

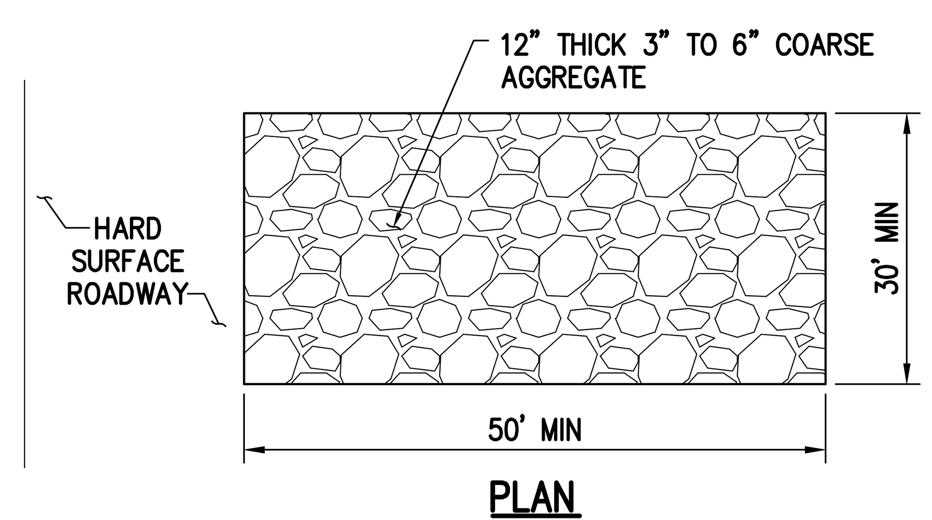

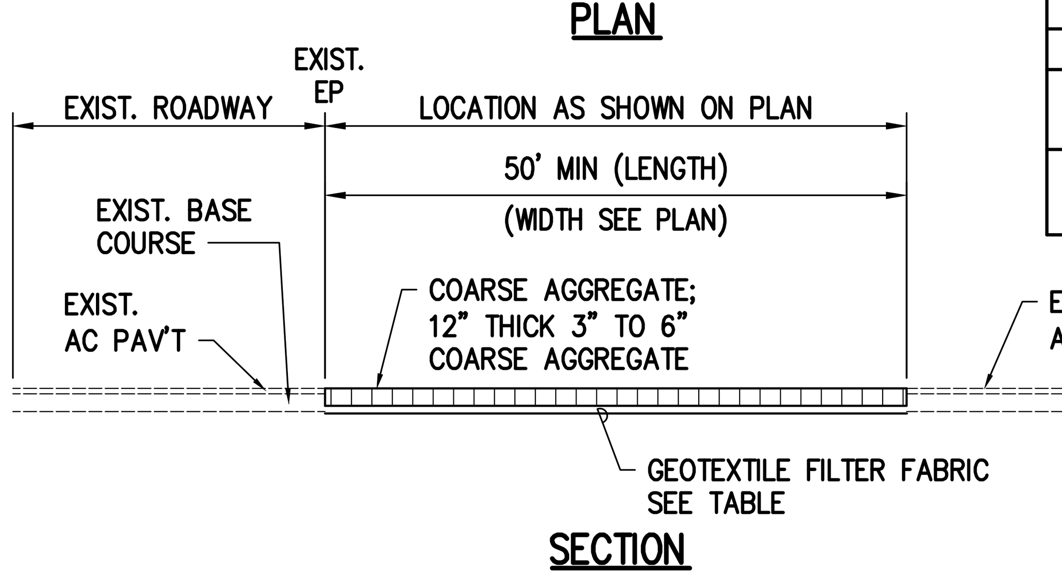

GEOTEXTILE REQUIREMENTS	
PHYSICAL PROPERTY	REQUIREMENTS
GRAB TENSILE STRENGTH	220 LB (ASTM D1682)
ELONGATION FAILURE	60% (ASTM D1682)
MULLEN BURST STRENGTH	430 LB (ASTM D3786)
PUNCTURE STRENGTH	125 LB (ASTM D751, MODIFIED)
EQUIVALENT OPENING	SIZE 40-80 (U.S. STD. SIEVE, CW-02215)

1 STABILIZED CONSTRUCTION ENTRANCE AND EXIT
C501 N.T.S.

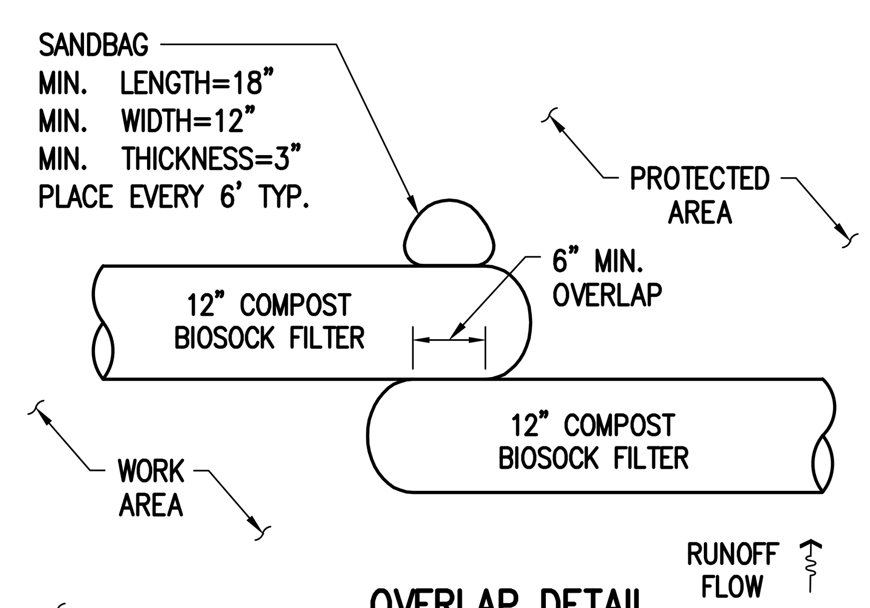

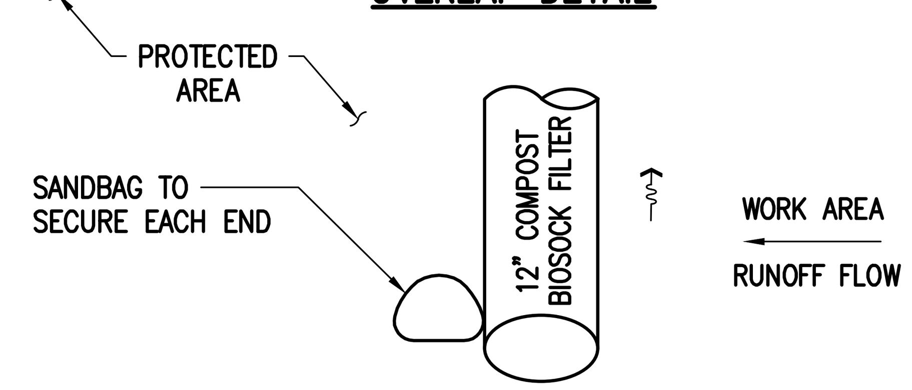

2 COMPOST BIOFILTER SOCK DETAIL
C501 N.T.S.

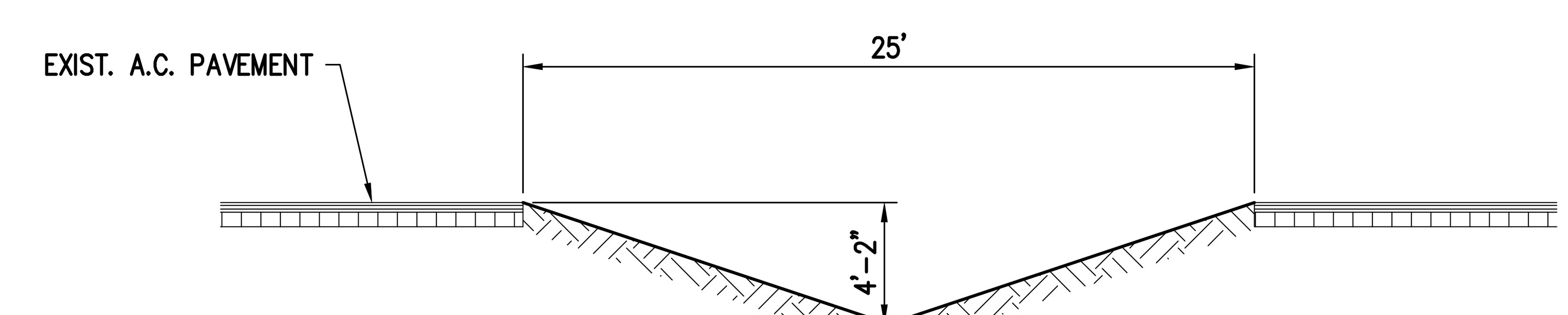

3 SEDIMENT TRAP DETAIL
C501 N.T.S.

APPROVAL:

CHIEF, CIVIL ENGINEERING BRANCH, DPP　　DATE

Okahara and Associates Inc. CONSULTING ENGINEERS

CHARLES L. JURY LICENSED PROFESSIONAL ENGINEER NO. 13190-C HAWAII USA
4/30/2020
SIGNATURE　LICENSE EXPIRES

SUBMITTAL PHASE: BID SET
SUBMITTAL DATE: 03/23/2020
DES AHN　DRW MH　CHK CLJ

STATE OF HAWAII
DEPARTMENT OF DEFENSE
FACILITY MANAGEMENT OFFICE
DESIGN AND PROJECT MANAGEMENT BRANCH
HAWAII ARMY NATIONAL GUARD
KALAELOA OAHU
ARMY AVIATION SUPPORT FACILITY BUILDING 30
EROSION AND SEDIMENT CONTROL PLAN AND DETAILS CATEGORY 5

SCALE: AS NOTED
STATE JOB NO. CA-1825-C
FEDERAL PROJECT NO. 15190024
SHEET 19 OF 57
C501

PROJECT SCHEDULE AND RAIN RESPONSE PLAN

PROJECT SEQUENCE:

1. INSTALL STABILIZED CONSTRUCTION ENTRANCE, COMPOST BIOFILTER SOCK, AND SEDIMENT TRAP.
2. PROCEED WITH GRADING AND CONSTRUCTION OPERATIONS.
3. PERMANENTLY STABILIZE EXPOSED AREAS WITHIN THE LIMITS OF DISTURBANCE.
4. REMOVE TEMPORARY EROSION CONTROL STRUCTURES AFTER PERMANENT STABILIZATION IS COMPLETED.
5. PRACTICE GOOD HOUSEKEEPING MEASURES THROUGHOUT THE DURATION OF CONSTRUCTION.
6. INSPECTIONS WILL BE PERFORMED WEEKLY.

RAIN RESPONSE PLAN:

1. THE FOLLOWING WILL BE PERFORMED WHEN HEAVY RAINS, TROPICAL STORM OR HURRICANE IS IMMINENT OR IS FORECASTED IN THE NEXT 48 HOURS:

   A. TEMPORARY SUSPENSION OF GRADING AND TRENCHING.
   B. INSPECT ALL SEDIMENT TRAP AND PERIMETER CONTROLS AND MAINTAIN AS NEEDED. REINSTALL ANY PERIMETER CONTROLS THAT WERE REMOVED DUE TO ACTIVE WORK IN THE AREA.
   C. COVER OR RELOCATE MATERIAL STOCKPILES AND LIQUID MATERIAL CONTAINERS TO AVOID CONTACT WITH RAINWATER.
   D. PLACE SPILL PANS OR OIL–ONLY SPILL PADS UNDER CONSTRUCTION VEHICLES TO PREVENT RUNOFF FROM CONTACTING ANY SPILLED PETROLEUM PRODUCTS. PROPERLY DISPOSE OF ANY ACCUMULATED OILY WATER AFTER THE RAIN EVENT.
   E. RE–INSPECT AFTER THE APPROACHING HEAVY RAINS, TROPICAL STORM OR HURRICANE AND REPLACE OR MAINTAIN BMPS AS NEEDED.

EROSION PREVENTION/SEDIMENT CONTROL NOTES

1. THE CONTRACTOR SHALL FOLLOW THE GUIDELINES IN THE CITY AND COUNTY OF HONOLULU'S "RULES RELATING TO WATER QUALITY".
2. MEASURES TO CONTROL EROSION AND OTHER POLLUTANTS SHALL BE IN PLACE BEFORE ANY EARTHWORK IS INITIATED.
3. SLOPE PROTECTION IS REQUIRED ON AREAS WITH SLOPES GREATER THAN 15% AND ON AREAS OF MODERATE SLOPE THAT ARE PRONE TO EROSION UNLESS THEY ARE BEING ACTIVELY WORKED.
4. TEMPORARY STABILIZATION: TEMPORARY STABILIZATION IS REQUIRED ON DISTURBED AREAS WHICH ARE AT FINAL GRADE OR WHEN THE DISTURBED AREAS WILL NOT BE WORKED FOR 14 CONSECUTIVE DAYS OR MORE.
5. PERMANENT STABILIZATION: ALL DISTURBED AREAS SHALL BE PERMANENTLY STABILIZED USING VEGETATIVE COVERING, PAVEMENT, OR EQUIVALENT, PRIOR TO REMOVING EROSION AND SEDIMENT MEASURES. TRAPPED SEDIMENT AND AREAS OF DISTURBED SOIL WHICH RESULT FROM THE REMOVAL OF THE TEMPORARY MEASURES SHALL BE IMMEDIATELY AND PERMANENTLY STABILIZED.
6. PRESERVE EXISTING VEGETATION: CLEARLY MARK THE AREAS TO BE PRESERVED WITH FLAGS OR TEMPORARY FENCING. WHERE TEMPORARY FENCING IS USED, FENCING MUST BE ADEQUATELY SUPPORTED BY POSTS AND MAINTAINED IN AN UPRIGHT POSITION.
7. MINIMIZE SOIL COMPACTION AREAS WHERE FINAL STABILIZATION OR INFILTRATION PRACTICES WILL BE INSTALLED SHALL BE PROTECTED FROM EXCESSIVE COMPACTION DURING CONSTRUCTION. VEHICLE AND EQUIPMENT USE SHALL BE RESTRICTED OR TECHNIQUES TO CONDITION THE SOILS TO SUPPORT VEGETATION SHALL BE IMPLEMENTED IN THE AREAS THAT HAVE BEEN COMPACTED AND ARE DESIGNATED TO REMAIN VEGETATIVE OR POST–CONSTRUCTION INFILTRATION AREAS. CLEARLY MARK THE AREAS TO BE AVOIDED WITH FLAGS OR TEMPORARY FENCING. WHERE TEMPORARY FENCING IS USED, FENCING MUST BE ADEQUATELY SUPPORTED BY POSTS AND MAINTAINED IN AN UPRIGHT POSITION.
8. PERIMETER CONTROLS ARE REQUIRED DOWN SLOPE OF ALL DISTURBED AREAS.
9. SEDIMENT BARRIERS AND FENCES

   SEDIMENT FENCES OR BARRIERS SHALL BE USED DOWN SLOPE OF ALL DISTURBED AREAS. UNTIL SLOPES ARE STABILIZED A SEDIMENT FENCE OR BARRIER SHALL BE INSTALLED AT THE TOE OF SLOPE AND ON CONTOURS AT THE FOLLOWING SPACING:
   SLOPE $\geq$ 2:1 10 FEET SPACING
   SLOPE $\geq$ 2:1 AND $<$ 2:1 15 FEET SPACING
   SLOPE $<$ 4:1 20 FEET SPACING

10. INLET PROTECTION

    - ALL STORM DRAIN INLETS ONSITE AND THOSE OFFSITE WHICH MAY RECEIVE RUNOFF FROM THE SITE SHALL USE AN INLET PROTECTION DEVICE UNLESS THEY ARE DIRECTED TO A SEDIMENT BASIN.
    - SEDIMENTS LEVELS MAY NOT EXCEED ONE THIRD OF THE HEIGHT OF A SEDIMENT BARRIER OR INLET PROTECTION DEVICE AT ANY POINT ALONG THE LENGTH OF THE SEDIMENT BARRIER OR THE INLET PROTECTION DEVICE.
    - SEDIMENT BARRIERS AND INLET PROTECTION DEVICES MUST BE UNCLOGGED AND CLEANED WHEN PERFORMANCE IS COMPROMISED.
    - TORN, WEATHERED OR SAGGING SEDIMENT BARRIERS OR INLET PROTECTION DEVICES MUST BE REPAIRED OR REPLACED IMMEDIATELY.

11. SEDIMENT TRAP: SEDIMENT TRAP MUST BE KEPT IN EFFECTIVE OPERATING CONDITION AND SEDIMENT SHALL BE REMOVED TO MAINTAIN AT LEAST ONE THIRD THE DESIGN CAPACITY AT ALL TIMES. VELOCITY DISSIPATION DEVICES ARE REQUIRED AT EMERGENCY OUTLET.
12. TRACKING CONTROL

    - MINIMIZE SEDIMENT TRACK–OUT ONTO OFF–SITE STREETS, OTHER PAVED AREAS, AND SIDEWALKS FROM VEHICLES EXITING THE CONSTRUCTION SITE BY RESTRICTING VEHICLE TRAFFIC TO PROPERLY DESIGNATED AREAS AND USING ADDITIONAL CONTROLS TO REMOVE SEDIMENT FROM VEHICLE TIRES PRIOR TO EXITING THE SITE.
    - VEHICULAR PARKING AND MOVEMENTS ON PROJECT SITES MUST BE CONFINED TO PAVED SURFACES OR PREDEFINED PARKING AREAS AND VEHICLE PATHS, WHICH SHALL BE MARKED WITH FLAGS OR BOUNDARY FENCING.
    - ALL POLLUTANTS AND MATERIALS THAT ARE DROPPED, WASHED, TRACKED, SPILLED, OR OTHERWISE DISCHARGED FROM A PROJECT SITE TO OFF–SITE STREETS, OTHER PAVED AREAS, SIDEWALKS OR THE MS4 MUST BE CLEANED USING DRY METHODS SUCH AS SWEEPING OR VACUUMING.
    - WASHING POLLUTANTS AND MATERIALS THAT ARE DISCHARGED FROM THE PROJECT SITE TO THE MS4 INTO DRAIN INLETS OR CATCH BASINS IS PROHIBITED UNLESS THE MATERIAL IS SEDIMENT AND THE INLETS ARE DIRECTED TO A SEDIMENT TRAP.

13. BEST MANAGEMENT PRACTICES (BMPS) SHALL NOT BE REMOVED UNTIL STABILIZATION IS COMPLETE FOR THAT PHASE.
14. REFER TO CITY AND COUNTY OF HONOLULU BEST MANAGEMENT PRACTICES MANUAL – CONSTRUCTION, FOR MORE INFORMATION ON BMPS.
15. THE FOLLOWING BMPS WERE DETERMINED TO NOT BE APPLICABLE BECAUSE THEY WOULD NOT EFFECTIVELY MANAGE EROSION PREVENTION AND SEDIMENT CONTROL BASED ON THE SITE SPECIFIC CONDITIONS. AS CONSTRUCTION PROGRESSES, REVISIONS MAY BE NECESSARY AND WILL BE PROVIDED TO DPP INSPECTORS.

    1. SEDIMENT BASIN
    2. DIVERSION BMPS TO DIVERT RUNOFF FROM UPSTREAM AREA AROUND DISTURBED AREA OF THE SITE.
    3. BUFFER ZONE
    4. SEDIMENT BARRIERS
    5. STORM DRAIN INLET PROTECTION
    6. CONTAMINATED SOIL MANAGEMENT
    7. DEWATERING OPERATIONS

16. THE OWNER OF THE PROPERTY OR THEIR AUTHORIZED AGENT MUST DESIGNATE A PERSON RESPONSIBLE FOR IMPLEMENTING THE ESCP AT THE PROJECT SITE ("ESCP COORDINATOR") PRIOR TO PERMIT ISSUANCE USING THE FORM PROVIDED AS APPENDIX A TO THE RULES RELATING TO WATER QUALITY.

GOOD HOUSEKEEPING BMPs

1. STREET SWEEPING AND VACUUMING. ALL POLLUTANTS DISCHARGED FROM CONSTRUCTION SITE TO OFF–SITE AREAS MUST BE SWEPT OR VACUUMED EACH DAY BEFORE LEAVING THE JOB SITE.
2. MATERIALS DELIVERY, STORAGE AND USE MANAGEMENT. PREVENT, REDUCE, OR ELIMINATE THE DISCHARGE OF POLLUTANTS FROM MATERIAL DELIVERY, STORAGE, AND USE TO THE STORM WATER SYSTEM OR WATERCOURSES BY MINIMIZING THE STORAGE OF HAZARDOUS MATERIALS ONSITE, STORING MATERIALS IN A DESIGNATED AREA, INSTALLING SECONDARY CONTAINMENT. CONSTRUCTION MATERIALS, WASTE, TOXIC AND HAZARDOUS SUBSTANCES, STOCKPILES AND OTHER SOURCES OF POLLUTION SHALL NOT BE STORED IN BUFFER AREAS, NEAR AREAS OF CONCENTRATED FLOW, OR AREAS ABUTTING THE MS4, RECEIVING WATERS, OR DRAINAGE IMPROVEMENTS THAT DISCHARGE OFF–SITE. PRIMARY AND SECONDARY CONTAINMENT CONTROLS AND COVERS SHALL BE IMPLEMENTED TO THE MEP.
3. SPILL PREVENTION AND CONTROL. CREATE AND IMPLEMENT SPILL PREVENTION AND RESPONSE PLANS TO ELIMINATE AND MINIMIZE THE DISCHARGE OF POLLUTANTS TO THE MS4 AND RECEIVING WATERS FROM LEAKS AND SPILLS BY REDUCING THE CHANCE FOR SPILLS, ABSORBING, CONTAINING, AND CLEANING UP SPILLS AND PROPERLY DISPOSING OF SPILL MATERIALS. AT A MINIMUM, ALL PROJECTS SHALL CLEANUP ALL LEAKS AND SPILLS IMMEDIATELY.
4. HAZARDOUS MATERIALS. PREVENT OR REDUCE THE DISCHARGE OF POLLUTANTS TO STORM WATER FROM HAZARDOUS WASTE THROUGH PROPER MATERIAL USE AND WASTE DISPOSAL. IN THE EVENT THAT HAZARDOUS MATERIALS ARE DISCHARGED TO THE MS4, THE PROPERTY OWNER OR ESCP COORDINATOR SHALL IMMEDIATELY NOTIFY THE DEPARTMENT OF FACILITIES MAINTENANCE, HONOLULU FIRE DEPARTMENT, AND HONOLULU POLICE DEPARTMENT OF THE DISCHARGE BY TELEPHONE. A WRITTEN REPORT DESCRIBING THE POLLUTANTS THAT WERE DISCHARGED, THE REASONS FOR THE DISCHARGE, AND THE MEASURES THAT HAVE BEEN TAKEN OR WILL BE TAKEN TO PREVENT A REOCCURRENCE OF THE DISCHARGE SHALL BE SUBMITTED TO THE DIRECTOR NO LESS THAN 3 DAYS AFTER NOTIFICATION BY PHONE.
5. NONHAZARDOUS MATERIALS. IN THE EVENT THAT NONHAZARDOUS MATERIALS ARE DISCHARGED TO THE MS4, THE PROPERTY OWNER OR ESCP COORDINATOR SHALL NOTIFY THE CITY DEPARTMENT OF FACILITIES MAINTENANCE BY TELEPHONE NO LATER THAN THE NEXT BUSINESS DAY. A WRITTEN REPORT DESCRIBING THE POLLUTANTS THAT WERE DISCHARGED, THE REASONS FOR THE DISCHARGE, AND THE MEASURES THAT HAVE BEEN TAKEN OR WILL BE TAKEN TO PREVENT A REOCCURRENCE OF THE DISCHARGE SHALL BE SUBMITTED TO THE DIRECTOR NO LESS THAN 3 DAYS AFTER NOTIFICATION BY PHONE.
6. VEHICLE AND EQUIPMENT CLEANING. ELIMINATE AND MINIMIZE THE DISCHARGE OF POLLUTANTS TO STORM WATER FROM VEHICLE AND EQUIPMENT CLEANING OPERATIONS BY USING OFF–SITE FACILITIES WHEN FEASIBLE, WASHING IN DESIGNATED, CONTAINED AREAS ONLY, AND ELIMINATING DISCHARGES TO THE STORM DRAIN SYSTEM BY EVAPORATING AND/OR TREATING WASH WATER, AS APPROPRIATE OR INFILTRATING WASH WATER FOR EXTERIOR CLEANING ACTIVITIES THAT USE WATER ONLY.
7. VEHICLE AND EQUIPMENT FUELING. PREVENT FUEL SPILLS AND LEAKS BY USING OFF–SITE FACILITIES, FUELING ONLY IN DESIGNATED AREAS, ENCLOSING OR COVERING STORED FUEL, AND IMPLEMENTING SPILL CONTROLS SUCH AS SECONDARY CONTAINMENT AND ACTIVE MEASURES USING SPILL RESPONSE KITS.
8. VEHICLES AND EQUIPMENT MAINTENANCE. ELIMINATE AND MINIMIZE THE DISCHARGE THE DISCHARGE OF POLLUTANTS TO STORM WATER FROM VEHICLE AND EQUIPMENT MAINTENANCE OPERATIONS BY USING OFF–SITE FACILITIES WHEN FEASIBLE, PERFORMING WORK IN DESIGNATED AREAS ONLY, USING SPILL PADS UNDER VEHICLES AND EQUIPMENT, CHECKING FOR LEAKS AND SPILLS, AND CONTAINING AND CLEANING UP SPILLS IMMEDIATELY.
9. SOLID WASTE MANAGEMENT. PREVENT OR REDUCE DISCHARGE OF POLLUTANTS TO THE LAND, GROUNDWATER, AND IN STORM WATER FROM SOLID WASTE OR CONSTRUCTION AND DEMOLITION WASTE BY PROVIDING DESIGNATED WASTE COLLECTION AREAS, COLLECT SITE TRASH DAILY, AND ENSURING THAT CONSTRUCTION WASTE IS COLLECTED, REMOVED, AND DISPOSED OF ONLY AT AUTHORIZED DISPOSAL AREAS.
10. SANITARY/SEPTIC WASTE MANAGEMENT. TEMPORARY AND PORTABLE SANITARY AND SEPTIC WASTE SYSTEMS SHALL BE MOUNTED OR STAKED IN, WELL–MAINTAINED AND SCHEDULED FOR REGULAR WASTE DISPOSAL AND SERVICING. SOURCES OF SANITARY AND/OR SEPTIC WASTE SHALL NOT BE STORED NEAR THE MS4 OR RECEIVING WATERS.
11. STOCKPILE MANAGEMENT. STOCKPILES SHALL NOT BE LOCATED IN DRAINAGE WAYS, WITHIN 50 FEET FROM AREAS OF CONCENTRATED FLOWS, AND ARE NOT ALLOWED IN THE CITY RIGHT–OF–WAY. SEDIMENT BARRIERS OR SILT FENCES SHALL BE USED AROUND THE BASE OF ALL STOCKPILES. STOCKPILES SHALL NOT EXCEED 15 FEET IN HEIGHT. STOCKPILES GREATER THAN 15 FEET IN HEIGHT SHALL REQUIRE 8 FOOT WIDE BENCHING IN ACCORDANCE WITH ROH CHAPTER 14, ARTICLE 15. STOCKPILES MUST BE COVERED WITH PLASTIC SHEETING OR A COMPARABLE MATERIAL IF THEY WILL NOT BE ACTIVELY USED WITHIN 7 DAYS.
12. LIQUID WASTE MANAGEMENT. LIQUID WASTE SHALL BE CONTAINED IN A CONTROLLED AREA SUCH AS A HOLDING PIT, SEDIMENT BASIN, ROLL–OFF BIN, OR PORTABLE TANK OF SUFFICIENT VOLUME AND TO CONTAIN THE LIQUID WASTES GENERATED. CONTAINMENT AREAS OR DEVICES MUST BE IMPERMEABLE AND LEAK FREE AND SHOULD NOT BE LOCATED WHERE ACCIDENTAL RELEASE OF THE CONTAINED LIQUID CAN DISCHARGE TO WATER BODIES, CHANNELS, OR STORM DRAINS.
13. CONCRETE WASTE MANAGEMENT. PREVENT OR REDUCE THE DISCHARGE OF POLLUTANTS TO STORM WATER FROM CONCRETE WASTE BY CONDUCTING WASHOUT OFFSITE OR PERFORMING ONSITE WASHOUT IN A DESIGNATED AREA CONSTRUCTED AND MAINTAINED IN SUFFICIENT QUANTITY AND SIZE TO CONTAIN ALL LIQUID AND CONCRETE WASTE GENERATED BY WASHOUT OPERATIONS. PLASTIC LINING MATERIAL SHOULD BE A MINIMUM OF 10 MILLIMETER POLYETHYLENE SHEETING AND SHOULD BE FREE OF HOLES, TEARS, OR OTHER DEFECTS THAT COMPROMISE THE IMPERMEABILITY OF THE MATERIAL. CONTAINMENT AREAS OR DEVICES SHOULD NOT BE LOCATED WHERE ACCIDENTAL RELEASE OF THE CONTAINED LIQUID CAN DISCHARGE TO WATER BODIES, CHANNELS, OR STORM DRAINS. WASHOUT FACILITIES MUST BE CLEANED, OR NEW FACILITIES MUST BE CONSTRUCTED AND READY FOR USE ONCE THE WASHOUT IS 75 PERCENT FULL. ONCE CONCRETE WASTES ARE WASHED INTO THE DESIGNATED AREA AND ALLOWED TO HARDEN, THE CONCRETE SHOULD BE BROKEN UP, REMOVED, AND DISPOSED OF AS SOLID WASTES.
14. CONTAMINATED SOIL MANAGEMENT. AT MINIMUM CONTAIN CONTAMINATED MATERIAL SOIL BY SURROUNDING WITH IMPERMEABLE LINED BERMS OR COVER EXPOSED CONTAMINATED MATERIAL WITH PLASTIC SHEETING. CONTAMINATED SOIL SHOULD BE DISPOSED OF PROPERLY IN ACCORDANCE WITH ALL APPLICABLE REGULATIONS.
15. DUST CONTROL SHALL BE APPLIED TO REDUCE DUST EMISSIONS. THE CONTRACTOR. AT HIS OWN EXPENSE, SHALL KEEP THE PROJECT AREA AND SURROUNDING AREA FREE FROM DUST NUISANCE. THE WORK SHALL BE IN CONFORMANCE WITH THE AIR POLLUTION CONTROL STANDARDS CONTAINED IN HAWAII ADMINISTRATIVE RULES: CHAPTER 11–60, "AIR POLLUTION CONTROL". CONTRACTOR SHOULD KEEP THE OPEN SITE WATERED DURING CONSTRUCTION HOURS.
16. BMP AND SITE MAINTENANCE. CONTRACTOR SHALL MAINTAIN THE SITE BMPS DURING THE PROPOSED WORK.

APPROVAL:

CHIEF, CIVIL ENGINEERING BRANCH, DPP

DATE

HAWAII ARMY NATIONAL GUARD

Okahara and Associates Inc.
CONSULTING ENGINEERS

CHARLES L. JURY
LICENSED PROFESSIONAL ENGINEER
NO. 13190-C
HAWAII USA

THIS WORK WAS PREPARED BY ME OR UNDER MY SUPERVISION AND CONSTRUCTION OF THIS PROJECT WILL BE UNDER MY OBSERVATION.

4/30/2020
SIGNATURE LICENSE EXPIRES

SYM	DESCRIPTION	DATE	APPR

SUBMITTAL PHASE: BID SET

SUBMITTAL DATE: 03/23/2020

DES AHN | DRW MH | CHK CLJ

STATE OF HAWAII
FACILITY MANAGEMENT OFFICE

DEPARTMENT OF DEFENSE
DESIGN AND PROJECT MANAGEMENT BRANCH

HAWAII ARMY NATIONAL GUARD

KALAELOA OAHU

ARMY AVIATION SUPPORT FACILITY BUILDING 30

EROSION AND SEDIMENT CONTROL NOTES

SCALE: AS NOTED

STATE JOB NO. CA–1825–C

FEDERAL PROJECT NO. 15190024

SHEET 20 OF 57

C502

GENERAL NOTES

1. CONSTRUCTION DOCUMENTS REASONABLY DESCRIBE THE INTENT OF THE QUALITY AND SCOPE OF THE CONSTRUCTION FOR THE PROJECT. WHERE DETAILS ARE NOT SHOWN, THE CONTRACTOR SHALL PROCEED WITH THE WORK WITH AN ACCEPTED QUALITY DEPICTED FROM CONTRACTOR STANDARDS AND PROCEDURES OF THE CONSTRUCTION INDUSTRY IN THE STATE OF HAWAII AS WELL AS THE GENERAL INTENT OF THE CONSTRUCTION DOCUMENTS. CLARIFICATION MAYBE SUBMITTED TO THE CONTRACTING OFFICER FOR REVIEW BEFORE PROCEEDING.
2. CONTRACTOR SHALL FIELD VERIFY ALL DIMENSIONS, ELEVATIONS, AND CONDITIONS PRIOR TO BEGINNING ANY WORK AND SHALL NOTIFY THE CONTRACTIING OFFICER OF ANY DISCREPANCY AND/OR CONDITION WHICH WILL PREVENT HIM/HER FROM FULFILLING THE TERMS OF THE CONTRACT. CONTRACTOR SHALL BE HELD FULLY RESPONSIBLE FOR ALL CORRECTIONS AND REPAIRS DUE TO THEIR FAILURE TO DO SO.
3. GENERAL CONTRACTOR SHALL REVIEW ALL SHOP DRAWINGS AND COORDINATE THE WORK OF THE VARIOUS TRADES TO FIT ACTUAL CONDITIONS AND MAKE INTERFACING ADJUSTMENTS AS REQUIRED.
4. QUANTITIES SHOWN AND/OR SPECIFIED IN THE DRAWINGS AND SPECIFICATIONS SHALL BE VERIFIED BY THE CONTRACTOR. CONTRACTOR SHALL BE HELD FULLY RESPONSIBLE FOR ALL QUANTITIES.
5. SOME NOTES ON THE ARCHITECTURAL SHEETS MAY REQUIRE CIVIL, LANDSCAPE, STRUCTURAL, MECHANICAL, AND/OR ELECTRICAL WORKS. IT IS THE GENERAL CONTRACTOR'S RESPONSIBILITY TO COORDINATE FOR COMPLETE WORK.
6. WHERE WARRANTIES ARE SPECIFIED, CONTRACTOR'S BID SHALL INCLUDE FULL COMPLIANCE OF ALL CONDITIONS REQUIRED BY THE WARRANTIES. WHERE THE MANUFACTURER'S WARRANTY REQUIREMENTS AND/OR RECOMMENDATION VARY FROM THE REQUIREMENTS OF THE CONSTRUCTION DOCUMENTS, THE CONTRACTOR IS EXPECTED TO COMPLY WITH THE STRICTER OF THE TWO PROVIDED REQUIREMENTS DO NOT VOID WARRANTY. CONTRACTOR SHALL INFORM THE CONTRACTING OFFICER IN WRITING WHERE PROPOSED CONSTRUCTION WILL DEVIATE FROM THE CONSTRUCTION DOCUMENTS.
7. THE CONTRACTOR SHALL PROVIDE AND MAINTAIN A SAFETY BARRICADE AROUND THE PROJECT SITE AND SHALL ASSURE THE SAFETY OF THE PUBLIC AT ALL TIMES.
8. THE CONTRACTOR SHALL BE RESPONSIBLE FOR PROVIDING ALL BLOCKING, BACKING, BRACKETS, ETC. AS REQUIRED FOR THE PROPER AND SECURED INSTALLATION OF ALL MATERIALS AND PRODUCTS.
9. THE CONTRACTOR SHALL REVIEW THE PROJECT FOR ANY LONG LEAD ITEMS AND PROVIDE SPECIAL CONSIDERATIONS TO AVOID UNNECESSARY DELAYS TO THE COMPLETION OF THE PROJECT.
10. THE CONTRACT, ADDENDA, SUPPLEMENTAL CONDITIONS, GENERAL REQUIREMENTS, GENERAL CONDITIONS, AND TECHNICAL SPECIFICATIONS SHALL HAVE PRECEDENCE OVER THESE GENERAL NOTES. ANY CONFLICT BETWEEN THESE GENERAL NOTES AND LANGUAGE FOUND IN THE ABOVE DOCUMENTS OR IN THE DRAWINGS OR IN ANY OTHER CONTRACT DOCUMENT SHALL BE BROUGHT TO THE ATTENTION OF THE CONTRACTING OFFICER IMMEDIATELY FOR FURTHER CLARIFICATION.
11. CONTRACTOR SHALL PROVIDE COMPLETE SYSTEMS AND ASSEMBLIES THAT INCLUDE ALL COMPONENTS NECESSARY FOR A FULLY FUNCTIONAL ASSEMBLY SATISFYING THE DESIGN INTENT, COMPLY WITH THE REQUIREMENTS INDICATED IN THE CONTRACT DOCUMENTS AND READY FOR THE INTENDED USE. REFERENCE CONDITIONS OF THE CONTRACT AND/OR GENERAL REQUIREMENTS FOR ADDITIONAL INFORMATION.
12. REFERENCE CONDITIONS OF THE CONTRACT AND/OR GENERAL REQUIREMENTS FOR ANY OCCUPANCY RESTRICTIONS OR REQUIREMENTS DURING CONSTRUCTION.
13. REFERENCE THE CONTRACT AND/OR GENERAL REQUIREMENTS REGARDING REQUIREMENTS FOR DOCUMENTATION AND REPORTING OF FIELD CONDITIONS BY THE CONTRACTOR. CONTRACTOR SHALL COORDINATE WITH THE CONTRACT DOCUMENTS.
14. REFERENCE CONDITIONS OF THE CONTRACT AND/OR GENERAL REQUIREMENTS REGARDING COORDINATION OF THE WORK OR OTHER SPECIAL COORDINATION REQUIREMENTS.
15. FLOOR ELEVATIONS ARE INDICATED TO THE TOP SURFACE OF THE "STRUCTURAL" SLAB, UNLESS NOTED OTHERWISE.
16. CEILING HEIGHTS ARE INDICATED FROM FLOOR ELEVATIONS TO THE FINISH FACE OF SUSPENDED CEILING SYSTEMS OR FACE OF FINISH MATERIALS, AS INDICATED OR SCHEDULED.
17. DIMENSIONS SHOWN ON THE DRAWINGS SHALL INDICATE THE REQUIRED SIZES, CLEARANCES, AND DIMENSIONAL RELATIONSHIPS BETWEEN PROJECT SYSTEMS, ASSEMBLIES AND COMPONENTS. DIMENSIONS SHALL NOT BE DETERMINED BY SCALING THE DRAWINGS.
18. WHERE EQUIPMENT OR COMPONENTS HAVE DIMENSIONAL VARIATION DEPENDENT ON THE SELECTED MANUFACTURER, THE CONTRACTOR SHALL BE RESPONSIBLE TO COORDINATE ADJOINING CONSTRUCTION TO ACCOMMODATE THE SELECTED MANUFACTURER'S REQUIREMENTS.
19. REFERENCE DIVISION 01 OF THE PROJECT MANUAL FOR ADDITIONAL REQUIREMENTS FOR COORDINATION OF DRAWINGS AND DIMENSIONS.
20. "REPLACE" MEANS TO REMOVE EXISTING AND TO PROVIDE AND INSTALL ITEM TO MATCH THE EXISTING DESIGN SUCH AS MATERIAL, THICKNESS, COLOR, QUALITY, CONSTRUCTION, ETC., UNLESS OTHERWISE DETAILED OR NOTED. CONTRACTOR SHALL FIELD VERIFY EXISTING CONDITIONS AND DESIGN PRIOR TO REMOVAL.
21. ALL MATERIALS, ITEMS, NOTED IN THE DRAWINGS ARE "NEW" UNLESS NOTED OTHERWISE.
22. CONTRACTOR SHALL PATCH ALL SURFACES EXPOSED FROM CUTTING, AND OR REMOVAL WORK. PATCH SHALL MATCH THE MATERIAL AND FINISH OF ADJACENT SURFACES.
23. THE CONTRACTOR SHALL PROTECT ALL ITEMS, IN ADJACENT AREAS WITHIN THE PROJECT SITE FROM DAMAGE. DAMAGE TO BUILDINGS, LANDSCAPING, LAWN, HOSE BIBS, ETC., BY THE CONTRACTOR, THE CONTRACTOR'S EMPLOYEES, SUBCONTRACTORS AND EQUIPMENT, SHALL BE REPLACED AND/OR REPAIRED AT NO EXTRA COST TO THE GOVERNMENT.
24. ALL EXISTING ITEMS AND/OR FINISHES SCHEDULED TO REMAIN, BUT DAMAGED DURING CONSTRUCTION, SHALL BE CORRECTED TO MATCH THE EXISTING MATERIAL AND FINISHES AT NO EXTRA COST TO THE GOVERNMENT.
25. ALL WASTE MATERIALS SHALL BE PROMPTLY REMOVED AND PROPERLY DISPOSED OF OUTSIDE THE LIMITS OF STATE'S PROPERTY DAILY.
26. CONTRACTOR SHALL PROTECT ALL EXISTING SURFACES DURING CONSTRUCTION. THE COST FOR MATERIAL, LABOR, INSTALLATION AND REMOVAL SHALL BE INCLUDED IN THE SCOPE OF WORK. ALL DAMAGES SHALL BE REPAIRED AND/OR REPLACED TO MATCH ADJACENT SURFACES AND TO THE SATISFACTION OF THE CONTRACTING OFFICER.
27. THE CONTRACTOR WITH THE SUPERVISION OF THE CONTRACTING OFFICER SHALL INSPECT AND NOTE ALL EXISTING DAMAGES PRIOR TO THE START OF WORK. ANY NEW DAMAGES RESULTING FROM THE CONSTRUCTION SHALL BE CORRECTED AT THE CONTRACTOR'S COST.
28. THE CONTRACTOR SHALL VISIT THE SITE, COMPARE THE DRAWINGS AND SPECIFICATIONS AND VERIFY ALL CONDITIONS IN ORDER TO COMPLETE THE PROJECT IN ACCORDANCE WITH THE INTENT OF THE DRAWINGS.
29. BEFORE ANY SERVICE IS DISCONNECTED OR INTERRUPTED, THE CONTRACTOR SHALL VERIFY USAGE AND ASSURE THAT REQUIRED SERVICES ARE NOT DISCONNECTED OR INTERRUPTED. ANY REQUIRED SERVICE DISCONNECTED OR INTERRUPTED SHALL BE RESTORED IMMEDIATELY BY THE CONTRACTOR AT NO ADDITIONAL COST TO THE STATE.
30. CONTRACTOR SHALL SUBMIT IN WRITING ANY REQUEST FOR MODIFICATION TO THE PLANS AND SPECIFICATIONS. UNLESS CHANGES ARE SUBMITTED IN WRITING AND APPROVED BY THE CONTRACTING OFFICER, CHANGES OR MODIFICATIONS TO THE PLANS AND SPECIFICATIONS BECOME THE RESPONSIBILITY OF THE PERSON INITIATING SUCH CHANGES.
31. STRUCTURES UNDERGOING CONSTRUCTION, ALTERATION, OR DEMOLITION OPERATIONS, INCLUDING THOSE IN UNDERGROUND LOCATIONS, SHALL COMPLY WITH NFPA 241, STANDARD FOR SAFEGUARDING CONSTRUCTION, ALTERATION, AND DEMOLITION OPERATIONS, AND THIS CHAPTER. 2012 NFPA 1.
32. THE CONTRACTOR SHALL PROTECT ALL ITEMS IN AND ABOVE GROUND WITHIN THE PROJECT SITE AND ADJACENT PROPERTIES FROM DAMAGES. DAMAGES TO BUILDINGS, SIDEWALKS, UTILITY LINES (PLUMBING, ELECTRICAL, TELEPHONE, DATA, ETC.), LANDSCAPING, LAWN, HOSE BIBS, ETC., BY THE CONTRACTOR, THE CONTRACTOR'S EMPLOYEES, SUBCONTRACTORS, AND EQUIPMENT SHALL BE REPLACED AND/OR REPAIRED AT NO ADDITIONAL COST TO THE STATE. THE CONTRACTOR IS ALSO RESPONSIBLE TO RESTORE THE GROUNDS (GRASSING AND LANDSCAPE IRRIGATION) AND CONCRETE WALKWAYS USED FOR PARKING AND STAGING.
33. THIS PROJECT SHALL CONFORM TO THE CURRENT ABA STANDARDS FOR ACCESSIBLE DESIGN.

FINISH NOTES:

1. ALL CONDUIT, JUNCTION BOXES, RACEWAYS, AND OTHER EXPOSED ELECTRICAL ITEMS TO BE PAINTED SHALL MATCH ADJACENT SURFACES.
2. ALL STRUCTURAL SUPPORTS AND ATTACHMENTS, IE. UNISTRUT, ATTACHMENTS, BOLTS, WOOD/ STEEL SUPPORTS, ETC. TO BE PAINTED SHALL MATCH ADJACENT SURFACES.
3. ALL EXPOSED MECHANICAL DUCTS/ ENCLOSURES TO BE PAINTED SHALL MATCH ADJACENT SURFACES.
4. ALL ITEMS INDICATED ABOVE TO BE PAINTED SHALL MATCH ADJACENT SURFACES UNLESS NOTED OTHERWISE ON THE DRAWINGS.

DEFINITIONS:

1. "TYPICAL" OR "TYP." INDICATES IDENTICAL COMPLETE SYSTEM, ASSEMBLY OR COMPONENT SHALL BE PROVIDED FOR EACH OCCURRENCE OF THE CONDITION NOTED.
2. "SIMILAR" INDICATES COMPLETE SYSTEM, ASSEMBLY AND COMPONENTS SHALL BE PROVIDED, INCLUDING ANY ADJUSTMENTS REQUIRED DUE TO VARIATION AT A PARTICULAR CONDITION, RESULTING IN COMPARABLE CHARACTERISTICS FOR THE "SIMILAR" CONDITION NOTED. THE CONTRACTING OFFICER SHALL BE THE SOLE JUDGE OF A SIMILAR CONDITION'S COMPLIANCE WITH THE DESIGN INTENT.
3. "AS REQUIRED" INDICATES ITEMS OF WORK REQUIRED TO PROVIDE FOR A COMPLETE SYSTEM, ASSEMBLY OR COMPONENT AS INDICATED IN THE CONTRACT DOCUMENTS. ALL COMPONENTS OF THE NOTED SYSTEM SHALL BE PROVIDED, INSTALLED, COMPLETE AND READY FOR THE INTENDED USE.
4. "ALIGN" INDICATES ACCURATELY PROVIDE FINISH FACES OF MATERIALS IN STRAIGHT, TRUE, LEVEL AND/OR PLUMB RELATION TO ADJACENT SURFACES WITHIN TOLERANCES DEFINED IN THE TECHNICAL SPECIFICATIONS.
5. REFERENCE DIVISION 01 OF THE PROJECT MANUAL FOR ADDITIONAL DEFINITIONS AND CLARIFICATIONS.

DIMENSIONS:

1. SHALL HAVE PRECEDENCE OVER SCALE. DIMENSIONS SHALL BE VERIFIED IN THE FIELD BEFORE PROCEEDING WITH THE WORK.
2. ALL DIMENSIONS SHALL BE VERIFIED BY THE CONTRACTOR PRIOR TO RENOVATION/FABRICATION.
3. (E) MEANS "EXISTING". CONTRACTOR SHALL VERIFY EXISTING DIMENSIONS AND CONFIRM SIZES PRIOR TO RENOVATION/FABRICATION.
4. OTHER DIMENSIONS AND SIZES PROVIDED IN THE DRAWINGS ARE TO INDICATE GENERAL SCOPE OF WORK. CONTRACTOR SHALL VERIFY DIMENSIONS AND SIZES FOR PROPER FIT, CONSTRUCTION, INSTALLATION AND OPERATION.

ARCHITECTURAL ABBREVIATIONS

A	
ADJ	ADJUSTABLE
AFF	ABOVE FINISH FLOOR
ACOUST	ACOUSTICAL
ALUM	ALUMINUM
AT	ACOUSTICAL TILE
@	AT
B	
BD	BOARD
BLDG	BUILDING
BLK	BLOCK
BLKG	BLOCKING
BM	BEAM
BOT	BOTTOM
C	
CAR	CARPET
CAB	CABINET
CLG	CEILING
℄	CENTER LINE
CLR	CLEAR
CMU	CONCRETE MASONRY UNIT
CNTR	COUNTER
COL	COLUMN
CONC	CONCRETE
CONT	CONTINUOUS
CPT	CARPET
CT	CERAMIC TILE
D	
DC	DISPLAY CASE
DEMO	DEMOLISH
DET	DETAIL
DF	DRINKING FOUNTAIN
DIA OR ø	DIAMETER
DIM	DIMENSION
DISP	DISPOSABLE
DN	DOWN
DR	DOOR
DS	DOWNSPOUT
DWG	DRAWING
DWR	DRAWER
E	
EA	EACH
EL	ELEVATION
ELEC	ELECTRICAL
ELEV	ELEVATOR
EQ	EQUAL
(E)	EXISTING
EXIST	EXISTING
EXT	EXTERIOR
F	
FEC	FIRE EXTINGUISHER CABINET
FF	FINISH FLOOR
FL/FLR	FLOOR
FR	FRAME
FT	FOOT OR FEET
FLUOR	FLUORESCENT
G	
GA	GAUGE
GC	GENERAL CONTRACTOR
GL	GRID LINE
GYP	GYPSUM
H	
HDCP/HC	HANDICAPPED
HDWE/HDWR	HARDWARE
HIARNG	HAWAII AIR NATIONAL GUARD
HR	HOUR
H/HT/HGT	HEIGHT
HS	HAND SINK
HWY	HIGHWAY
I	
INSUL	INSULATION
INT	INTERIOR
J	
JB	JUNCTION BOX
L	
LAM	LAMINATED
LAV	LAVATORY
M	
MTD	MOUNTED
MAX	MAXIMUM
MECH	MECHANICAL
MET/MTL	METAL
MFR/MFG	MANUFACTURER
MIN	MINIMUM
MIR	MIRROR
MISC	MISCELLANEOUS
MTL	METAL
N	
NIC	NOT IN CONTRACT
NO OR #	NUMBER
NTS	NOT TO SCALE
(N)	NEW
O	
OC	ON CENTER
OPP	OPPOSITE
P	
PEMB	PRE–ENGINEERED METAL BUILDING
PLAM	PLASTIC LAMINATE
PLYWD	PLYWOOD
PT	PAINT
PTD	PAPER TOWEL DISPENSER
R	
RB	RUBBER BASE
RD	ROOF DRAIN
REF	REFRIGERATOR
REQ'D	REQUIRED
REV	REVISION/ REVISED
RF	RESILIENT FLOOR
RM	ROOM
RO	ROUGH OPENING
RPTD/WR	RECESSED PAPER TOWEL DISPENSER/ WASTE RECEPTACLE
S	
SC	SOLID CORE
SD	SOAP DISPENSER
SST	STAINLESS STEEL
SCHED	SCHEDULE
SECT	SECTION
SHT	SHEET
SIM	SIMILAR
SL	SLOPE
SQ	SQUARE
SST	STAINLESS STEEL
STD	STANDARD
STL	STEEL
STOR	STORAGE
STRL/STRUCT	STRUCTURAL
SUSP	SUSPENDED
T&G	TONGUE AND GROOVE
TB	TACK BOARD
TBD	TO BE DETERMINED
THK	THICK
THRU	THROUGH
TMK	TAX MAP KEY
TPH	TOILET PAPER HOLDER
TSC	TOILET SEAT COVER
TYP	TYPICAL
U	
UL	UNDERWRITER'S LABORATORIES
UON	UNLESS OTHERWISE NOTED
UR	URINAL
V	
VERT	VERTICAL
VCT	VINYL COMPOSITION TILE
VIF	VERTIFY IN FIELD
W	
WB	WHITE BOARD
W/WT	WIDTH
WC	WATER CLOSET
WR	WASTE RECEPTICLE
W/	WITH
W/O	WITHOUT

DRAWING SYMBOLS LEGEND

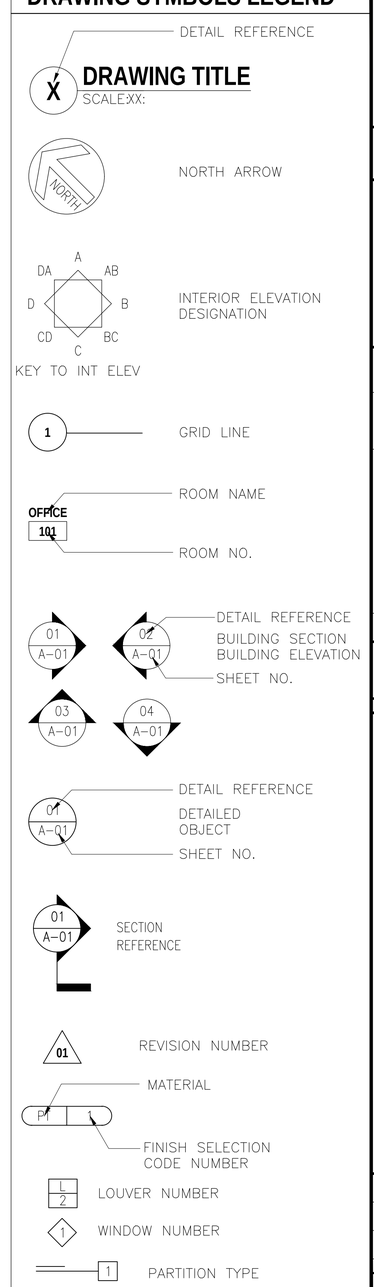

HAWAII ARMY NATIONAL GUARD

BOWERS + KUBOTA CONSULTING

INSERT COMPANY LOGO

MARK M. NAKAO
LICENSED PROFESSIONAL ARCHITECT
No. 5005
HAWAII U.S.A.

THIS WORK WAS PREPARED BY ME OR UNDER MY SUPERVISION AND CONSTRUCTION OF THIS PROJECT WILL BE UNDER MY OBSERVATION.

4/30/2020
SIGNATURE — LICENSE EXPIRES

SYM	DESCRIPTION	DATE	APPR

SUBMITTAL PHASE: BID SET

SUBMITTAL DATE: 03/23/2020

DES BY | DRW BY | CHK MN

DEPARTMENT OF DEFENSE
DESIGN AND PROJECT MANAGEMENT BRANCH

KALAELOA
OAHU

HAWAII ARMY NATIONAL GUARD

ARMY AVIATION SUPPORT FACILITY BUILDING 30

GENERAL NOTES, DRAWING SYMBOLS, ARCHITECTURAL ABBREVIATIONS

STATE OF HAWAII
FACILITY MANAGEMENT OFFICE

SCALE: AS NOTED

STATE JOB NO. CA–1825–C

FEDERAL PROJECT NO. 15190024

SHEET 21 OF 57

A001

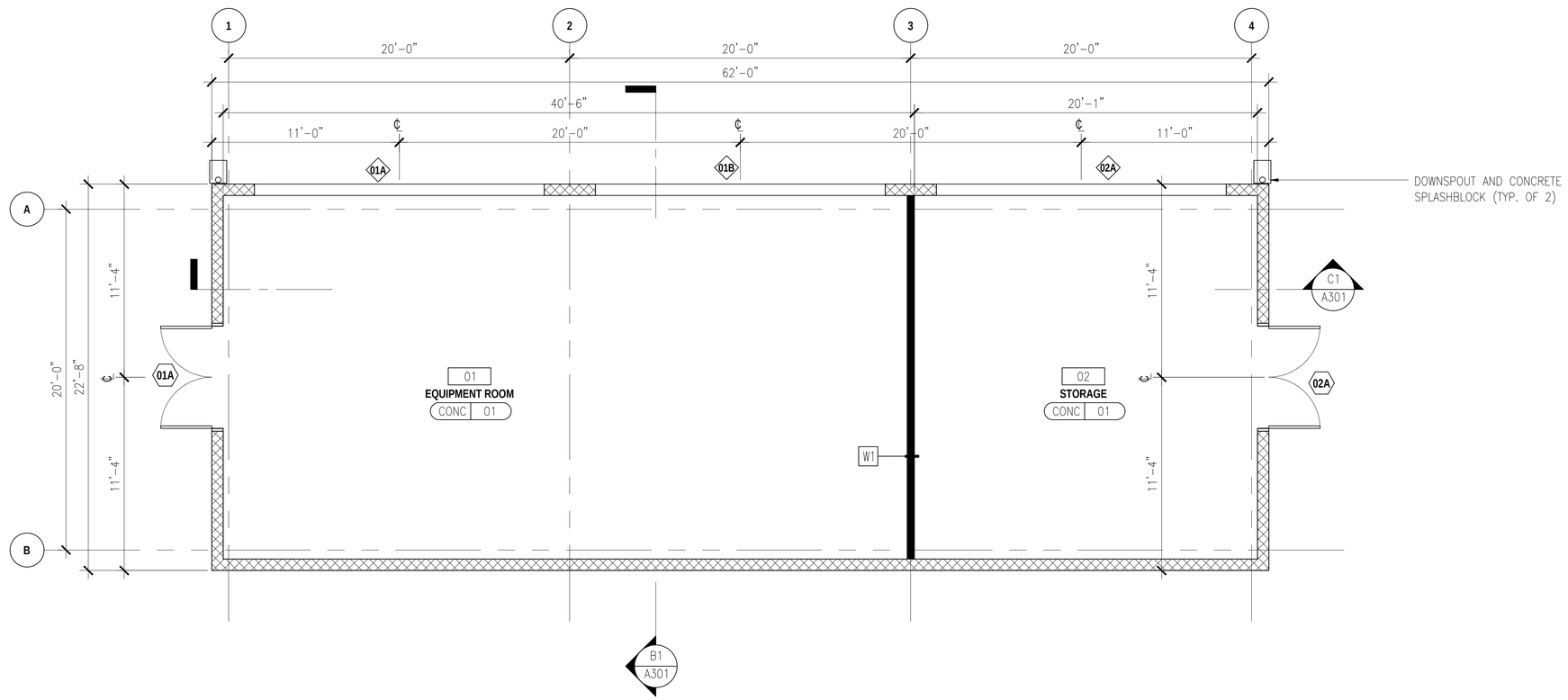

B1 FLOOR PLAN

SCALE:1/4"=1'-0"

NORTH

NOTES

1. SEE GENERAL NOTES FOR ADDITIONAL INFORMATION.
2. CONTRACTOR TO FIELD VERIFY ALL EXISTING CONDITIONS.
3. REFER TO CIVIL MECH., AND ELEC FOR ADDITIONAL INFORMATION.
4. REFER TO FINISH SCHEDULE FOR FINISH INFORMATION.
5. ALL DIMENSIONS ARE TAKEN FROM FACE OF FINISH MATERIAL, TYP.

LEGEND

- INTERIOR WALL AS SCHEDULED
- EXTERIOR CMU WALL
- DOOR AS SCHEDULED
- LOUVER AS SCHEDULED
- WALL AS SCHEDULED

HAWAII ARMY NATIONAL GUARD

BOWERS + KUBOTA CONSULTING
Project Management • Planning • Architecture/Engineering Design • Construction Management

INSERT COMPANY LOGO

MARK M. NAKAO
LICENSED PROFESSIONAL ARCHITECT
NO. 5025
HAWAII U.S.A.

THIS WORK WAS PREPARED BY ME OR UNDER MY SUPERVISION AND CONSTRUCTION OF THIS PROJECT WILL BE UNDER MY OBSERVATION.

SIGNATURE — LICENSE EXPIRES 4/30/2020

SYM	DESCRIPTION	DATE	APPR

SUBMITTAL PHASE: BID SET

SUBMITTAL DATE: 03/23/2020

DES BY | DRW BY | CHK MN

STATE OF HAWAII
FACILITY MANAGEMENT OFFICE

DEPARTMENT OF DEFENSE
DESIGN AND PROJECT MANAGEMENT BRANCH

HAWAII ARMY NATIONAL GUARD

KALAELOA
OAHU

ARMY AVIATION SUPPORT FACILITY BUILDING 30

FLOOR PLAN

SCALE: AS NOTED

STATE JOB NO. CA-1825-C

FEDERAL PROJECT NO. 15190024

SHEET 22 OF 57

A101

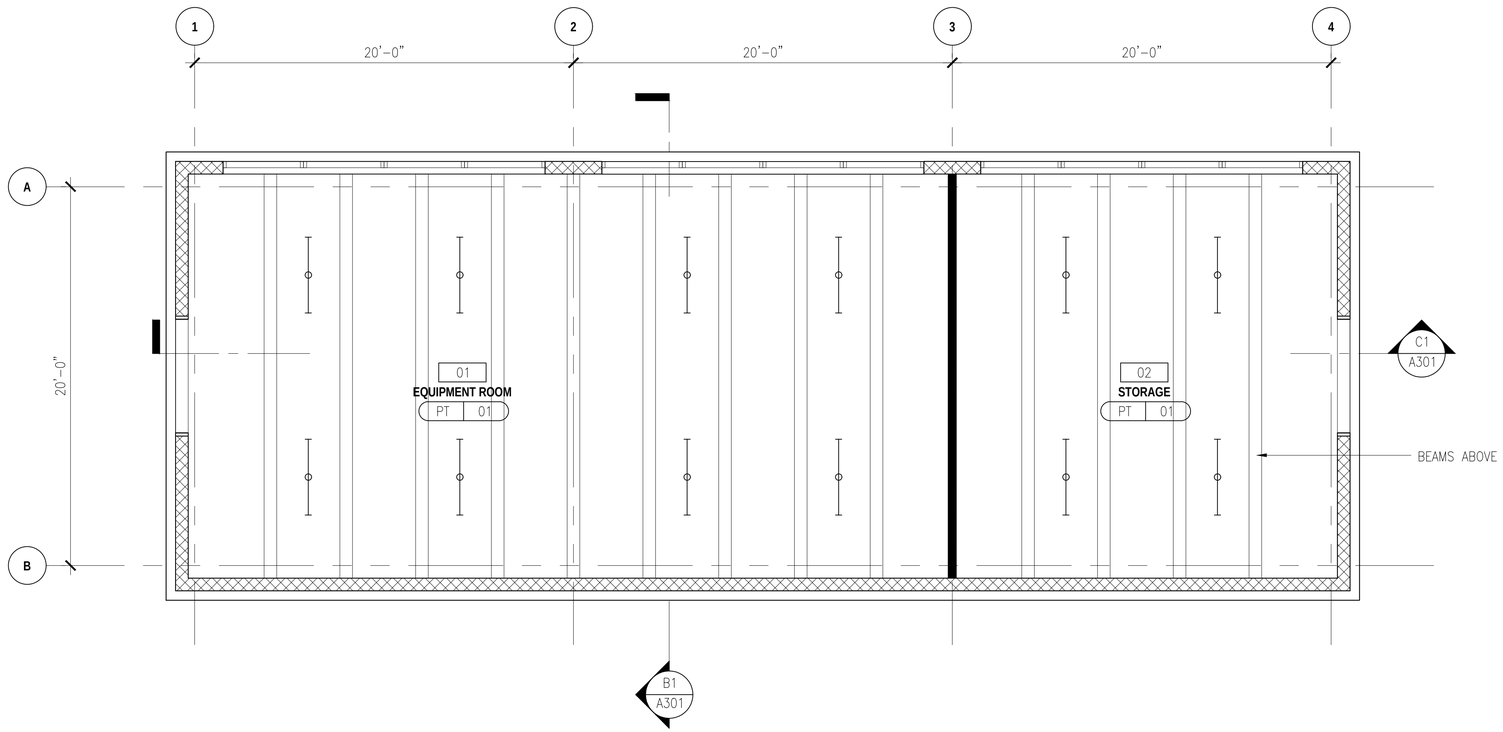

B1 FLOOR PLAN

SCALE:1/4"=1'-0"

NORTH

NOTES

1. SEE GENERAL NOTES FOR ADDITIONAL INFORMATION.
2. CONTRACTOR TO FIELD VERIFY ALL EXISTING CONDITIONS.
3. REFER TO CIVIL MECH AND ELEC FOR ADDITIONAL INFORMATION.
4. REFER TO FINISH SCHEDULE FOR FINISH INFORMATION.
5. ALL DIMENSIONS ARE TAKEN FROM FACE OF FINISH MATERIAL, TYP.

LEGEND

- INTERIOR WALL AS SCHEDULED
- EXTERIOR CMU WALL
- LIGHTS AS SCHEDULED

HAWAII ARMY NATIONAL GUARD

BOWERS + KUBOTA CONSULTING

Project Management ■ Planning ■ Architecture/Engineering Design ■ Construction Management

INSERT COMPANY LOGO

MARK M. NAKAO
LICENSED PROFESSIONAL ARCHITECT
NO. 5025
HAWAII U.S.A.

THIS WORK WAS PREPARED BY ME OR UNDER MY SUPERVISION AND CONSTRUCTION OF THIS PROJECT WILL BE UNDER MY OBSERVATION.

SIGNATURE — 4/30/2020 LICENSE EXPIRES

SYM	DESCRIPTION	DATE	APPR

SUBMITTAL PHASE: BID SET

SUBMITTAL DATE: 03/23/2020

DES BY | DRW BY | CHK MN

STATE OF HAWAII
FACILITY MANAGEMENT OFFICE

DEPARTMENT OF DEFENSE
DESIGN AND PROJECT MANAGEMENT BRANCH

HAWAII ARMY NATIONAL GUARD

KALAELOA
OAHU

ARMY AVIATION SUPPORT FACILITY BUILDING 30

REFLECTED CEILING PLAN

SCALE: AS NOTED

STATE JOB NO. CA-1825-C

FEDERAL PROJECT NO. 15190024

SHEET 23 OF 57

A102

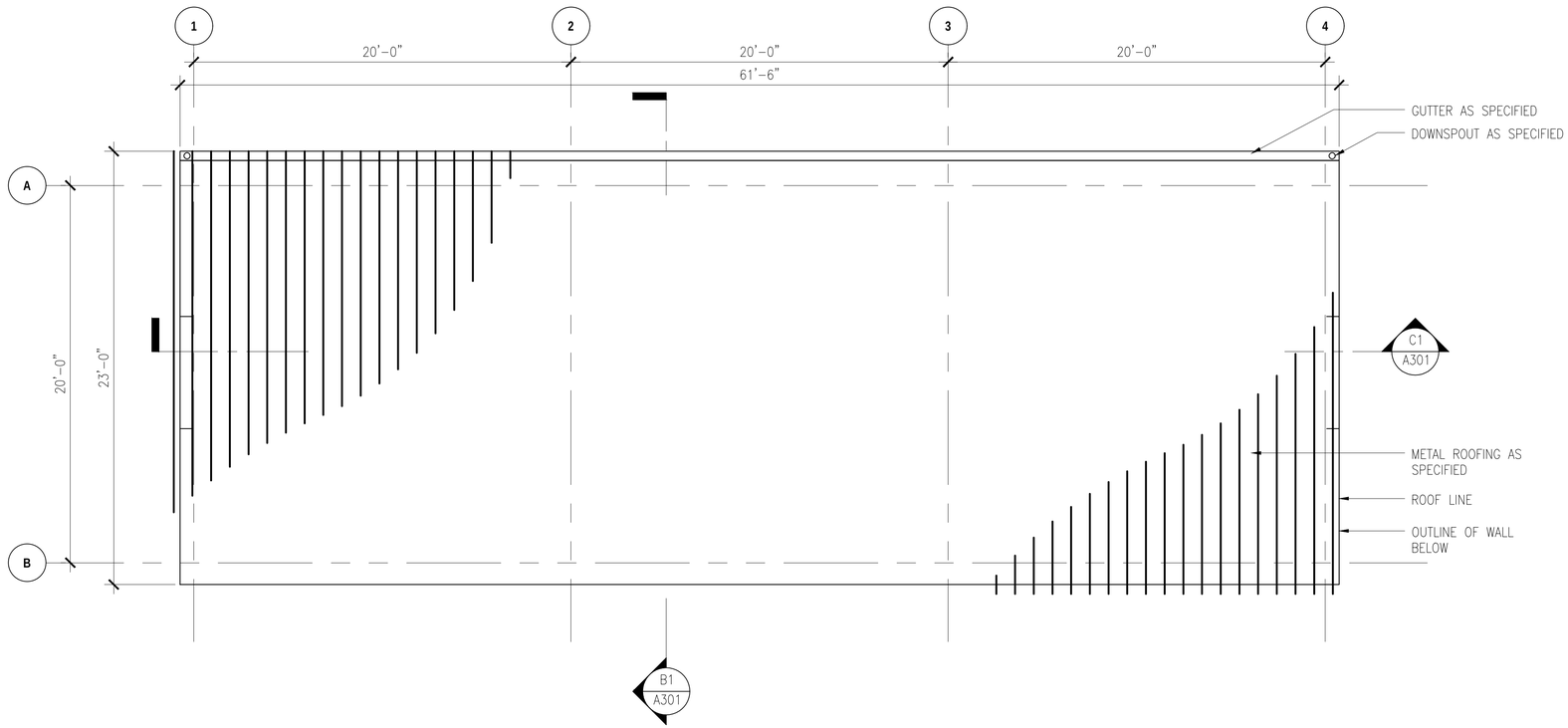

B1 FLOOR PLAN

SCALE:1/4"=1'-0"

NORTH

NOTES

1. SEE GENERAL NOTES FOR ADDITIONAL INFORMATION.
2. CONTRACTOR TO FIELD VERIFY ALL EXISTING CONDITIONS.
3. REFER TO FINISH SCHEDULE FOR FINISH INFORMATION.

LEGEND

HAWAII ARMY NATIONAL GUARD

BOWERS + KUBOTA CONSULTING
Project Management ■ Planning ■ Architectural/Engineering Design ■ Construction Management

INSERT COMPANY LOGO

MARK M. NAKAO
LICENSED PROFESSIONAL ARCHITECT
No. 3005
HAWAII U.S.A.

THIS WORK WAS PREPARED BY ME OR UNDER MY SUPERVISION AND CONSTRUCTION OF THIS PROJECT WILL BE UNDER MY OBSERVATION.

SIGNATURE — LICENSE EXPIRES 4/30/2020

SYM	DESCRIPTION	DATE	APPR

SUBMITTAL PHASE: BID SET

SUBMITTAL DATE: 03/23/2020

DES BY | DRW BY | CHK MN

STATE OF HAWAII
FACILITY MANAGEMENT OFFICE

DEPARTMENT OF DEFENSE
DESIGN AND PROJECT MANAGEMENT BRANCH

HAWAII ARMY NATIONAL GUARD

KALAELOA
OAHU

ARMY AVIATION SUPPORT FACILITY BUILDING 30

ROOF PLAN

SCALE: AS NOTED

STATE JOB NO. CA-1825-C

FEDERAL PROJECT NO. 15190024

SHEET 24 OF 57

A103

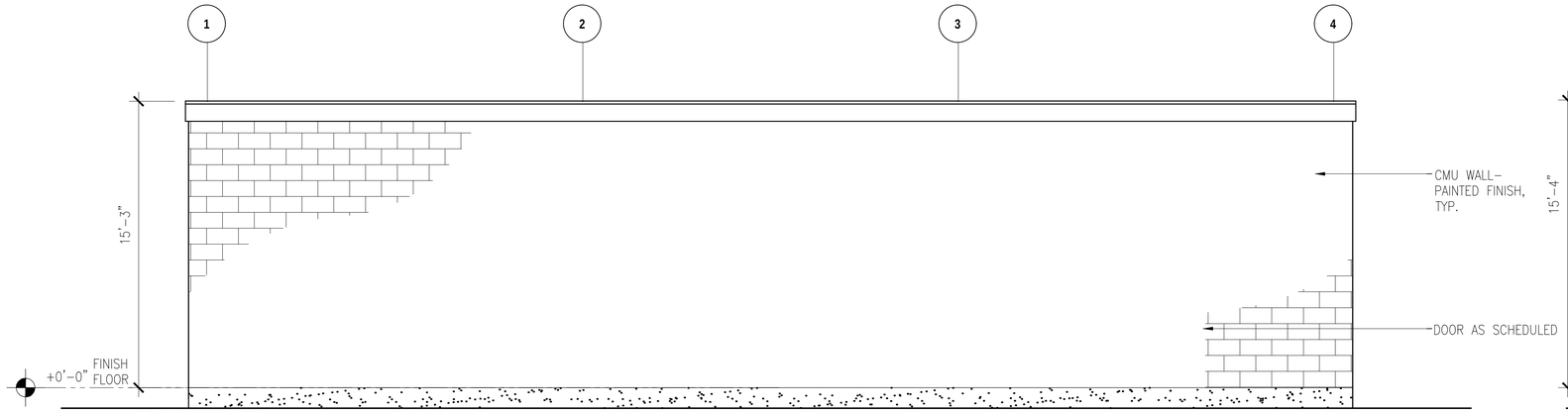

SOUTH ELEVATION

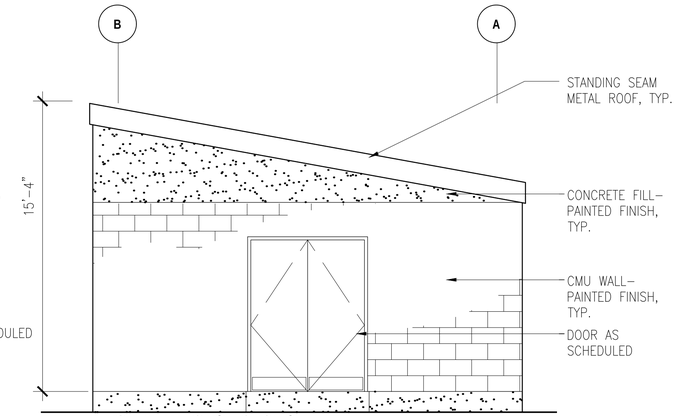

EAST ELEVATION (WEST SIM.)

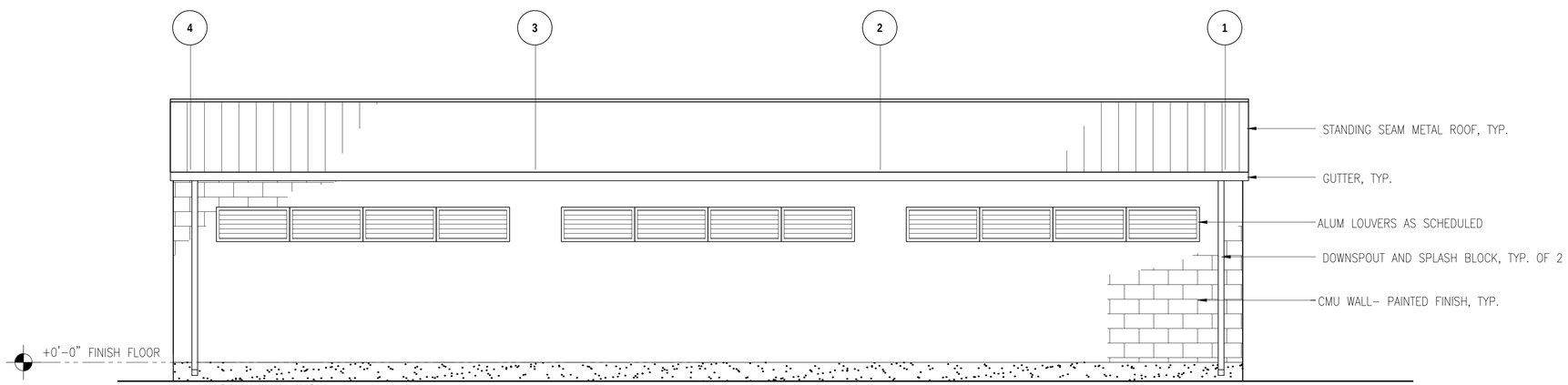

NORTH ELEVATION

B1 EXTERIOR ELEVATION

SCALE:1/4"=1'-0"

NOTES

1. SEE GENERAL NOTES FOR ADDITIONAL INFORMATION
2. CONTRACTOR TO FIELD VERIFY ALL EXISTING CONDITIONS
3. 0'-0" FINISH FLOOR ELEVATION REFERENCES ELEVATION INDICATED IN CIVIL DRAWINGS. SEE CIVIL FOR ADDITIONAL INFORMATION

HAWAII ARMY NATIONAL GUARD

BOWERS + KUBOTA CONSULTING
Project Management ■ Planning ■ Architectural/Engineering Design ■ Construction Management

INSERT COMPANY LOGO

MARK M. NAKAO
LICENSED PROFESSIONAL ENGINEER
No. 9205
HAWAII U.S.A.

THIS WORK WAS PREPARED BY ME OR UNDER MY SUPERVISION AND CONSTRUCTION OF THIS PROJECT WILL BE UNDER MY OBSERVATION.

SIGNATURE — LICENSE EXPIRES 4/30/2020

SYM	DESCRIPTION	DATE	APPR

SUBMITTAL PHASE: BID SET

SUBMITTAL DATE: 03/23/2020

DES BY | DRW BY | CHK MN

STATE OF HAWAII
FACILITY MANAGEMENT OFFICE

DEPARTMENT OF DEFENSE
DESIGN AND PROJECT MANAGEMENT BRANCH

HAWAII ARMY NATIONAL GUARD

KALAELOA
OAHU

ARMY AVIATION SUPPORT FACILITY BUILDING 30

EXTERIOR ELEVATIONS

SCALE: AS NOTED

STATE JOB NO. CA-1825-C

FEDERAL PROJECT NO. 15190024

SHEET 25 OF 57

A201

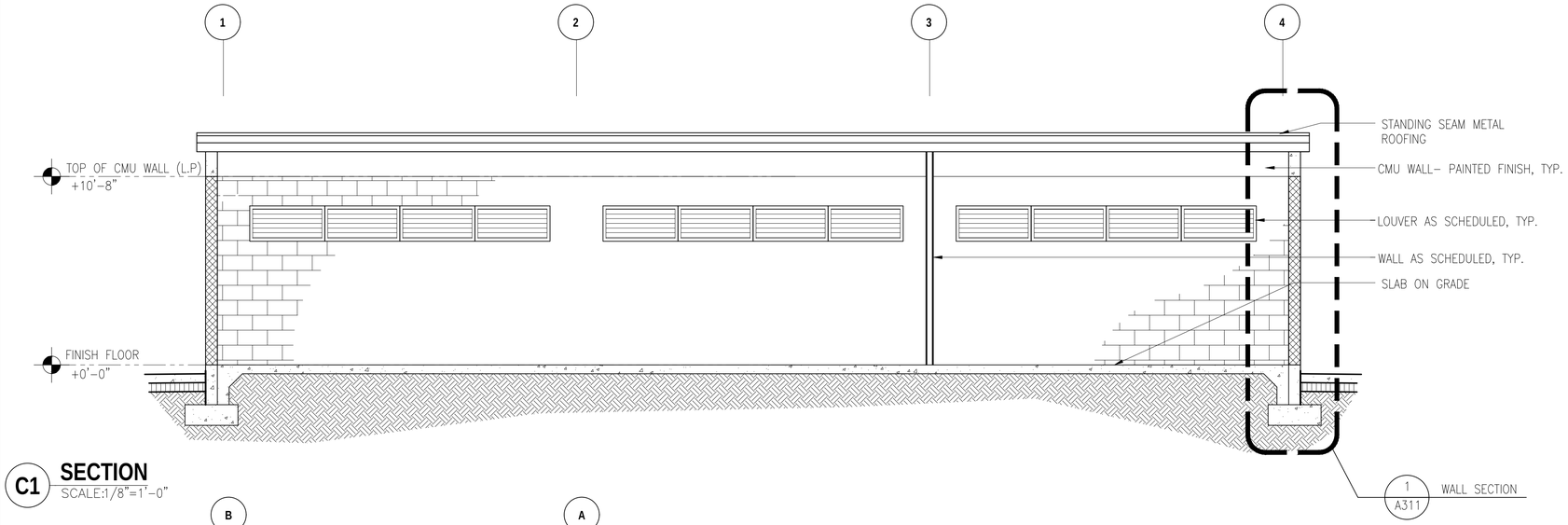

C1 **SECTION**
SCALE:1/8"=1'-0"

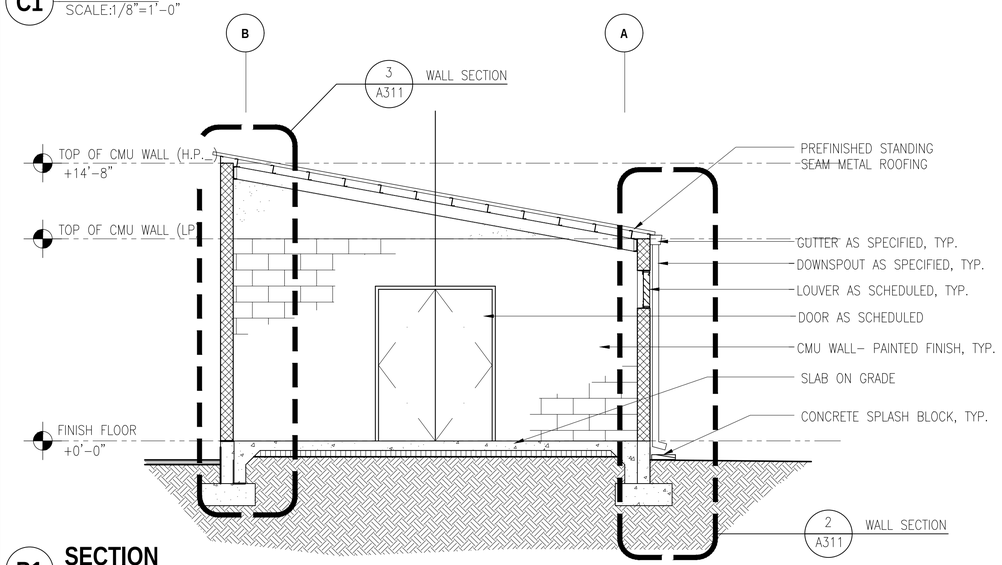

B1 **SECTION**
SCALE:1/8"=1'-0"

NOTES

1. SEE GENERAL NOTES FOR ADDITIONAL INFORMATION
2. CONTRACTOR TO FIELD VERIFY ALL EXISTING CONDITIONS
3. 0'-0" FINISH FLOOR ELEVATION REFERENCES ELEVATION INDICATED IN CIVIL DRAWINGS. SEE CIVIL FOR ADDITIONAL INFORMATION

HAWAII ARMY NATIONAL GUARD

BOWERS + KUBOTA CONSULTING
Project Management • Planning • Architectural/Engineering Design • Construction Management

INSERT COMPANY LOGO

MARK M. NAKAO
LICENSED PROFESSIONAL ARCHITECT
No. 5005
HAWAII U.S.A.

THIS WORK WAS PREPARED BY ME OR UNDER MY SUPERVISION AND CONSTRUCTION OF THIS PROJECT WILL BE UNDER MY OBSERVATION.

SIGNATURE 4/30/2020 LICENSE EXPIRES

SYM	DESCRIPTION	DATE	APPR

SUBMITTAL PHASE: BID SET

SUBMITTAL DATE: 03/23/2020

DES BY | DRW BY | CHK MN

DEPARTMENT OF DEFENSE
DESIGN AND PROJECT MANAGEMENT BRANCH
STATE OF HAWAII
FACILITY MANAGEMENT OFFICE

HAWAII ARMY NATIONAL GUARD

KALAELOA
OAHU

ARMY AVIATION SUPPORT FACILITY BUILDING 30

SECTIONS

SCALE: AS NOTED

STATE JOB NO. CA-1825-C

FEDERAL PROJECT NO. 15190024

SHEET 26 OF 57

A301

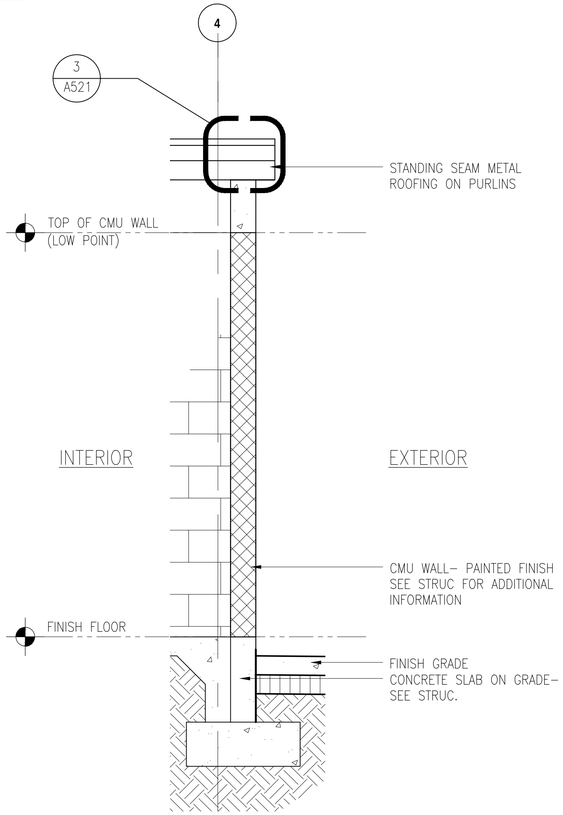

1 WALL SECTION
SCALE:1/2"=1'–0"

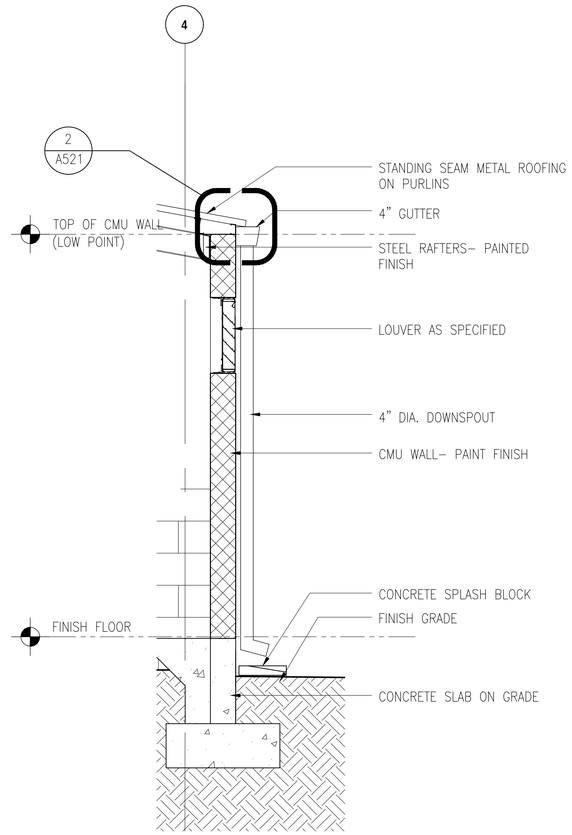

2 WALL SECTION
SCALE:1/2"=1'–0"

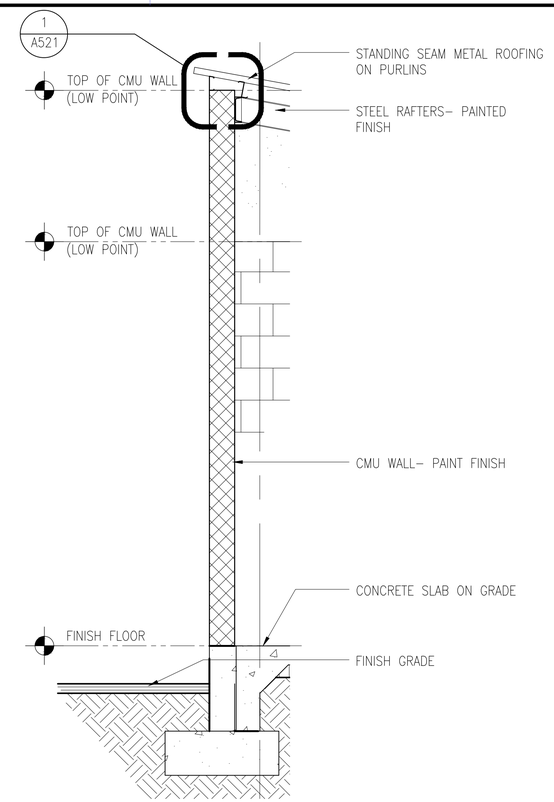

3 WALL SECTION
SCALE:1/2"=1'–0"

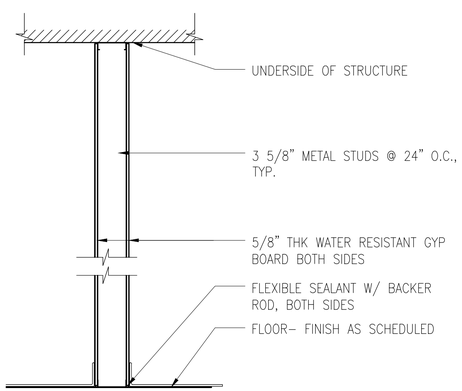

4 WALL TYPES
SCALE:3/4"=1'–0"

INSERT COMPANY LOGO

MARK M. NAKAO
LICENSED PROFESSIONAL ENGINEER
No. 9005
HAWAII U.S.A.

THIS WORK WAS PREPARED BY ME OR UNDER MY SUPERVISION AND CONSTRUCTION OF THIS PROJECT WILL BE UNDER MY OBSERVATION.

SIGNATURE — LICENSE EXPIRES 4/30/2020

SYM	DESCRIPTION	DATE	APPR

SUBMITTAL PHASE: BID SET

SUBMITTAL DATE: 03/23/2020

DES BY | DRW BY | CHK MN

STATE OF HAWAII
FACILITY MANAGEMENT OFFICE

DEPARTMENT OF DEFENSE
DESIGN AND PROJECT MANAGEMENT BRANCH

HAWAII ARMY NATIONAL GUARD

KALAELOA
OAHU

ARMY AVIATION SUPPORT FACILITY BUILDING 30

WALL SECTIONS

SCALE: AS NOTED

STATE JOB NO. CA–1825–C

FEDERAL PROJECT NO. 15190024

SHEET 27 OF 57

A311

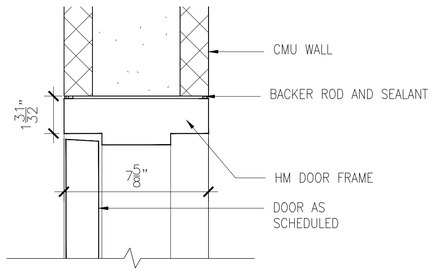

HEAD/ JAMB

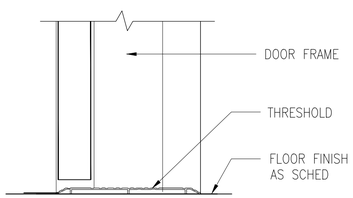

THRESHOLD

1 DOOR DETAILL

SCALE: 3"=1'-0"

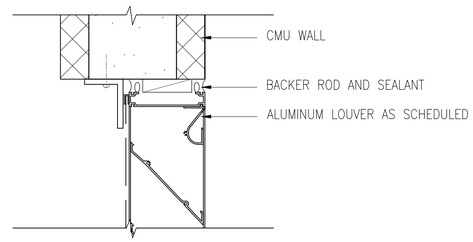

HEAD/ JAMB

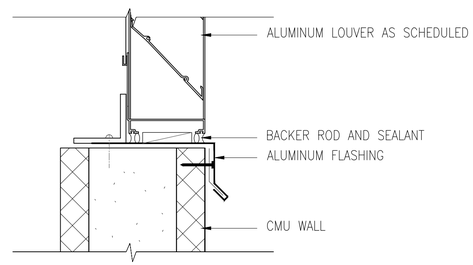

THRESHOLD

2 LOUVER DETAILL

SCALE: 3"=1'-0"

BOWERS + KUBOTA CONSULTING

Project Management • Planning • Architecture/Engineering Design • Construction Management

INSERT COMPANY LOGO

MARK M. NAKAO
LICENSED PROFESSIONAL ENGINEER
No. 9025
HAWAII U.S.A.

THIS WORK WAS PREPARED BY ME OR UNDER MY SUPERVISION AND CONSTRUCTION OF THIS PROJECT WILL BE UNDER MY OBSERVATION

SIGNATURE — LICENSE EXPIRES 4/30/2020

SYM	DESCRIPTION	DATE	APPR

SUBMITTAL PHASE: BID SET

SUBMITTAL DATE: 03/23/2020

DES BY | DRW BY | CHK MN

STATE OF HAWAII
FACILITY MANAGEMENT OFFICE

HAWAII ARMY NATIONAL GUARD

DEPARTMENT OF DEFENSE
DESIGN AND PROJECT MANAGEMENT BRANCH

KALAELOA
OAHU

ARMY AVIATION SUPPORT FACILITY BUILDING 30

DOOR DETAILS

SCALE: AS NOTED

STATE JOB NO. CA-1825-C

FEDERAL PROJECT NO. 15190024

SHEET 28 OF 57

A511

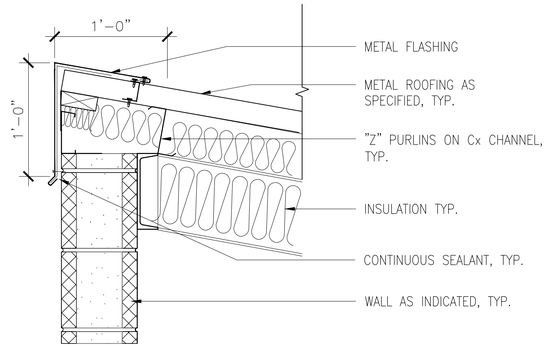

1 HALF RIDGE DETAIL
SCALE: 1 1/2"=1'-0"

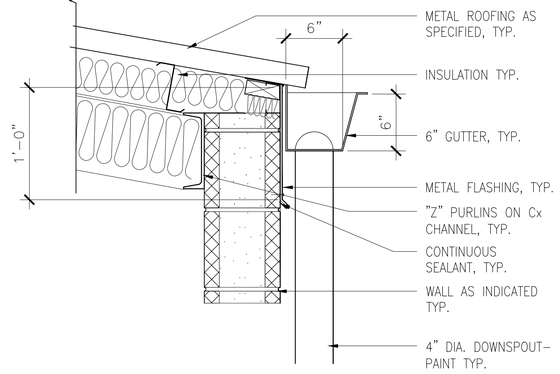

2 EAVE DETAILL
SCALE: 1 1/2"=1'-0"

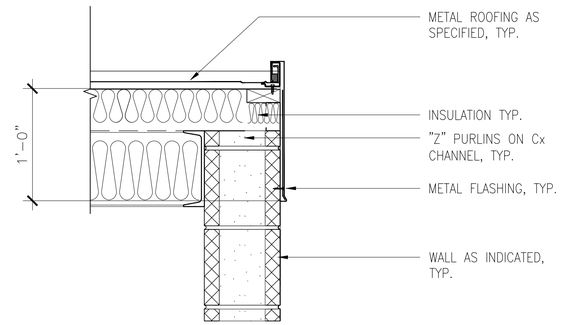

3 RAKE EDGE DETAILL
SCALE: 1 1/2"=1'-0"

INSERT COMPANY LOGO

BOWERS • KUBOTA CONSULTING
Project Management • Planning • Architecture/Engineering Design • Construction Management

MARK M. NAKAO
LICENSED PROFESSIONAL ARCHITECT
No. 5025
HAWAII U.S.A.

THIS WORK WAS PREPARED BY ME OR UNDER MY SUPERVISION AND CONSTRUCTION OF THIS PROJECT WILL BE UNDER MY OBSERVATION.

SIGNATURE | LICENSE EXPIRES 4/30/2020

SYM	DESCRIPTION	DATE	APPR

SUBMITTAL PHASE: BID SET

SUBMITTAL DATE: 03/23/2020

DES BY | DRW BY | CHK MN

STATE OF HAWAII
FACILITY MANAGEMENT OFFICE

DEPARTMENT OF DEFENSE
DESIGN AND PROJECT MANAGEMENT BRANCH

HAWAII ARMY NATIONAL GUARD

KALAELOA
OAHU

ARMY AVIATION SUPPORT FACILITY BUILDING 30

ROOF DETAILS

SCALE: AS NOTED

STATE JOB NO. CA-1825-C

FEDERAL PROJECT NO. 15190024

SHEET 29 OF 57

A521

DOOR SCHEDULE

DOOR NUMBER	DOOR TYPE	FRAME MATERIAL	FRAME FINISH	DOOR MATERIAL	DOOR FINISH	WIDTH	HEIGHT	THICKNESS	* HARDWARE NO.	DETAILS HEAD	DETAILS JAMB	DETAILS SILL	DETAILS	REMARKS
01A	A	HM	PT-4	HM	PT-5	6'-0"	8'-0"	1-3/4"	1	1/A521	1/A521	1/A521		
02A	A	HM	PT-4	HM	PT-5	6'-0"	7'-0"	1-3/4"	1	1/A521	1/A521	1/A521		

*NOTE:
1. ALL FINISH HARDWARE SHALL MEET A.D.A. REQUIREMENTS
2. ALL LOCKS TO BE KEYED DIFFERENT, PROVIDE KEYS PER LOCK AND STAMP KEYS WITH "DO NOT DUPLICATE"

LOUVER SCHEDULE

LOUVER NUMBER	LOUVER TYPE	FRAME MATERIAL		WIDTH	HEIGHT	THICKNESS		DETAILS HEAD	DETAILS JAMB	DETAILS SILL	DETAILS	REMARKS
01A	1	ALUM		16'-0"	2'-0"	4"		1/A511	1/A511	1/A511		
01B	1	ALUM		16'-0"	2'-0"	4"		1/A511	1/A511	1/A511		
02A	1	ALUM		16'-0"	2'-0"	4"		1/A511	1/A511	1/A511		

ROOM SIGNAGE SCHEDULE

CODE	LOCATION	INSERT	DETAIL
001	EXTERIOR	BUILDING NO	TYPE A

SIGNAGE NOTES

1. GENERAL CONTRACTOR SHALL GENERATE AND SUBMIT A SIGN SCHEDULE TO OWNER FOR REVIEW PRIOR TO FABRICATION AND COMMENCEMENT OF WORK.

2. MATCH EXTERIOR SIGNAGE TO BASE STANDARDS, AND MOUNT TO FACE OF BUILDING.

3. ALL TEXT SHALL BE "HELVETICA MEDIUM" FOR PRIMARY & "HELVETICA REGULAR FOR SECONDARY INFORMATION.

4. MECHANICALLY FASTEN GENERAL SIGNAGE TO THE WALL FOLLOW SIGN MANUFACTURER'S MOUNTING REQUIREMENTS.

5. THE CONTRACTOR IS RESPONSIBLE FOR SITE VERIFICATION PRIOR TO ORDERING & INSTALLATION OF ALL ITEMS. THE CONTRACTOR IS ALSO RESPONSIBLE FOR ANY ADDITIONAL HARDWARE REQUIRED FOR A COMPLETE INSTALLATION.

6. WORK SHALL CONFORM TO ALL APPLICABLE CODES & REGULATIONS. SIGNAGE & SIGNAGE LOCATIONS SHALL COMFORM TO THE AMERICANS WITH DISABILITIES ACT (ADA).

7. SYMBOLS AND GRAPHICS SHALL BE AS SPECIFIED BY THE AMERICANS WITH DISABILITIES ACT (ADA).

8. ALL BRAILLE LETTERS TO BE LOCATED PER SIGN TYPICAL. ALL BRAILLE LETTERS TO BE LOCATED A MINIMUM OF 3/8" FROM OTHER CHARACTERS.

DOOR TYPES

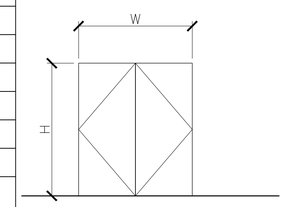

A
FLUSH PANEL
HOLLOW
METAL

LOUVER TYPES

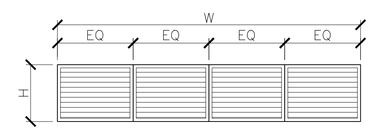

1
ALUM LOUVER

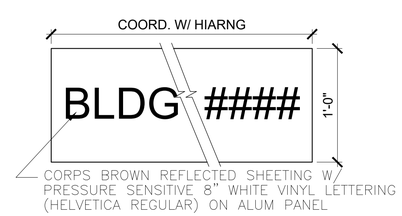

TYPE A (EXTERIOR)

*BUILDING NUMBERS SIGNS, NUMBERS SHALL BE PROVIDED BY THE HIARNG
MOUNT PER SPECIFICATIONS, PROVIDE SPACERS AS REQUIRED WHEN MOUNTING AT LOW POINTS OF SIDING

1 **SIGN TYPES**
SCALE:1"=1'-0"

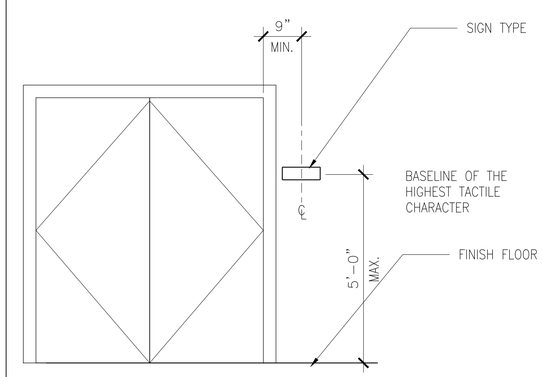

2 **SIGN LOCATION**
SCALE:1/2"=1'-0"

BOWERS + KUBOTA CONSULTING
Project Management • Planning • Architectural/Engineering Design • Construction Management
INSERT COMPANY LOGO

MARK M. NAKAO
LICENSED PROFESSIONAL ARCHITECT
No. 5005
HAWAII U.S.A.
THIS WORK WAS PREPARED BY ME OR UNDER MY SUPERVISION AND CONSTRUCTION OF THIS PROJECT WILL BE UNDER MY OBSERVATION.
SIGNATURE 4/30/2020 LICENSE EXPIRES

SYM	DESCRIPTION	DATE	APPR

SUBMITTAL PHASE: BID SET
SUBMITTAL DATE: 03/23/2020
DES BY | DRW BY | CHK MN

DEPARTMENT OF DEFENSE
DESIGN AND PROJECT MANAGEMENT BRANCH
STATE OF HAWAII
FACILITY MANAGEMENT OFFICE
HAWAII ARMY NATIONAL GUARD
KALAELOA OAHU
ARMY AVIATION SUPPORT FACILITY BUILDING 30
DOOR & WINDOW SCHEDULE/TYPES

SCALE: AS NOTED
STATE JOB NO. CA-1825-C
FEDERAL PROJECT NO. 15190024
SHEET 30 OF 57
A601

FINISH LEGEND

SYMBOL	MATERIAL	MANUFACTURER	PATTERN/COLOR	COMMENTS
CONC 01	SEALED CONCRETE	PRE- APPROVED MANUFACTURERS	CLEAR	
PT 01	PAINT(EXTERIOR CMU)	PRE- APPROVED MANUFACTURERS	SEMI-GLOSS, COLOR: TO BE SELECTED BY HIARNG	
PT 02	PAINT(INTERIOR WALLS)	PRE- APPROVED MANUFACTURERS	SEMI-GLOSS, COLOR: TO BE SELECTED BY HIARNG	
PT 03	PAINT(DOORS)	PRE- APPROVED MANUFACTURERS	SEMI-GLOSS, COLOR: TO BE SELECTED BY HIARNG	
PT 04	PAINT(DOOR FRAMES)	PRE- APPROVED MANUFACTURERS	SEMI-GLOSS, COLOR: TO BE SELECTED BY HIARNG	
MP 01	MTL PANEL (ROOF)	PRE- APPROVED MANUFACTURERS	PREFINISHED, COLOR: TO BE SELECTED BY HIARNG	STANDING SEAM METAL ROOF

* ALL COLORS SHALL BE SELECTED BY HIARNG.

HAWAII ARMY NATIONAL GUARD

BOWERS + KUBOTA CONSULTING
Project Management ■ Planning ■ Architectural/Engineering Design ■ Construction Management

INSERT COMPANY LOGO

MARK M. NAKAO
LICENSED PROFESSIONAL ARCHITECT
NO. 5025
HAWAII U.S.A.

THIS WORK WAS PREPARED BY ME OR UNDER MY SUPERVISION AND CONSTRUCTION OF THIS PROJECT WILL BE UNDER MY OBSERVATION.

SIGNATURE — LICENSE EXPIRES 4/30/2020

SYM	DESCRIPTION	DATE	APPR

SUBMITTAL PHASE: BID SET

SUBMITTAL DATE: 03/23/2020

DES BY | DRW BY | CHK MN

DEPARTMENT OF DEFENSE
DESIGN AND PROJECT MANAGEMENT BRANCH
HAWAII ARMY NATIONAL GUARD
STATE OF HAWAII
FACILITY MANAGEMENT OFFICE

KALAELOA
OAHU

ARMY AVIATION
SUPPORT FACILITY BUILDING 30

FINISH & MOUNTING SCHEDULE

SCALE: AS NOTED

STATE JOB NO. CA-1825-C

FEDERAL PROJECT NO. 15190024

SHEET 31 OF 57

A611

GENERAL:

A. WORKMANSHIP AND MATERIALS SHALL CONFORM TO THE BUILDING CODE AS STATED BELOW. HOWEVER, WHERE REFERENCE IS MADE TO PERFORMANCE CONFORMING TO OTHER STANDARDS THE MORE STRINGENT SHALL APPLY.
   1. INTERNATIONAL BUILDING CODE, IBC 2015
   2. UNITED FACILITIES CRITERIA, UFC
B. THE CONTRACTOR SHALL COMPARE ALL THE CONTRACT DOCUMENTS WITH EACH OTHER AND REPORT IN WRITING TO THE OWNER ALL INCONSISTENCIES AND OMISSIONS.
C. THE CONTRACTOR SHALL TAKE FIELD MEASUREMENTS AND VERIFY FIELD CONDITIONS AND SHALL COMPARE SUCH FIELD MEASUREMENTS AND CONDITIONS WITH THE DRAWINGS BEFORE COMMENCING WORK. REPORT IN WRITING TO THE OWNER ALL INCONSISTENCIES AND OMISSIONS.
D. THE CONTRACTOR SHALL BE RESPONSIBLE FOR COORDINATING THE WORK OF ALL TRADES.
E. THE CONTRACTOR SHALL BE RESPONSIBLE FOR METHODS OF CONSTRUCTION, WORKMANSHIP AND JOB SAFETY. THE CONTRACTOR SHALL PROVIDE TEMPORARY SHORING AND BRACING AS REQUIRED FOR STABILITY OF STRUCTURAL MEMBERS AND SYSTEMS.
F. CONSTRUCTION LOADING SHALL NOT EXCEED DESIGN LIVE LOAD UNLESS SPECIAL SHORING IS PROVIDED. ALLOWABLE LOADS SHALL BE REDUCED IN AREAS WHERE THE STRUCTURE HAS NOT ATTAINED FULL DESIGN STRENGTH.
G. THE CONTRACTOR SHALL BE RESPONSIBLE FOR PROTECTION OF THE ADJACENT PROPERTIES, STRUCTURES, STREETS AND UTILITIES DURING THE CONSTRUCTION PERIOD.
H. DETAILS NOTED AS TYPICAL ON THE STRUCTURAL DRAWINGS SHALL APPLY IN ALL CONDITIONS UNLESS SPECIFICALLY SHOWN OR NOTED.

DESIGN CRITERIA:

A. ROOF LIVE LOAD:-------------------------------- 20 PSF
B. WIND DESIGN DATA
   1. BASIC WIND SPEED (3-SECOND GUST):-------------- 130 MPH
   2. OCCUPANCY CATEGORY:----------------------- II
   3. IMPORTANCE FACTOR:------------------------ 1.0
   4. EXPOSURE CATEGORY:------------------------ C
   5. BUILDING ENCLOSURE CLASSIFICATION:-------------- ENCLOSED
   6. INTERNAL PRESSURE COEFFICIENT:---------------- ±0.18
C. EARTHQUAKE DESIGN DATA:
   1. OCCUPANCY CATEGORY:----------------------- II
   2. IMPORTANCE FACTOR:------------------------ 1.0
   3. MAPPED SPECTRAL RESPONSE ACCELERATIONS
      a. SHORT PERIOD:------------------------- 0.590g
      b. 1-SEC PERIOD:------------------------- 0.166g
   4. SITE CLASS:------------------------------ C
   5. SPECTRAL RESPONSE COEFFICIENTS
      a. SHORT PERIOD:------------------------- 0.458g
      b. 1-SEC PERIOD:------------------------- 0.181g
   6. DESIGN CATEGORY:-------------------------- C
   7. BASIC SEISMIC-FORCE-RESISTING SYSTEM:----------- REINFORCED MASONRY SHEAR WALLS
   8. RESPONSE MODIFICATION FACTOR:---------------- 5
   9. ANALYSIS PROCEDURE:------------------------ EQUIVALENT LATERAL FORCE PROCEDURE
D. SOILS
   1. SITE CLASS:------------------------------ C
   2. ALLOWABLE BEARING PRESSURE:---------------- 3000 PSF

SPECIAL INSPECTIONS:

A. THE CONTRACTOR SHALL BE RESPONSIBLE FOR ENSURING THAT SPECIAL INSPECTION OF PORTIONS OF THE WORK AS REQUIRED BY THE BUILDING CODE IS MADE AT THE APPROPRIATE TIME. THE CONTRACTOR SHALL SUBMIT STATEMENT OF RESPONSIBILITY TO THE OWNER AND BUILDING DEPARTMENT PRIOR TO THE COMMENCEMENT OF WORK. THE CONTRACTOR SHALL GIVE TIMELY NOTICE OF WHEN AND WHERE INSPECTIONS ARE TO BE MADE AND PROVIDE ACCESS FOR THE INSPECTOR. FREQUENCY OF INSPECTION IS DEFINED IN THE IBC, SECTION 1704 TABLES, AS AMENDED BY THE CITY. THE CONTRACTOR SHALL CORRECT DEFECTIVE WORK AT NO ADDITIONAL COST TO THE OWNER AND PAY FOR RE-INSPECTION AS REQUIRED.
B. SPECIAL INSPECTORS SHALL KEEP RECORDS OF INSPECTIONS. REPORTS SHALL INDICATE THAT WORK INSPECTED WAS DONE IN CONFORMANCE WITH APPROVED CONSTRUCTION DOCUMENTS. THE INSPECTOR SHALL SUBMIT A FINAL SIGNED REPORT TO THE OWNER AND LICENSED ARCHITECT OR ENGINEER WHO IN TURN SHALL SUBMIT A WRITTEN STATEMENT TO THE CITY CERTIFYING RECEIPT OF THE FINAL INSPECTION LETTER AND DOCUMENTING THAT THERE ARE NO KNOWN UNRESOLVED CODE REQUIREMENTS.
C. THE FOLLOWING TYPE OF WORK LISTED IN THE IBC, SECTION 1704, AS AMENDED BY THE CITY, REQUIRES SPECIAL INSPECTION:
   1. CONCRETE CONSTRUCTION
      a. EXCEPTIONS: INSPECTIONS NOT REQUIRED FOR CONCRETE POURS FOR
         i. CONCRETE FOOTINGS THAT ARE FULL SUPPORTED ON EARTH OR ROCK (DESIGNED f'c=2,500 PSI), INSPECTION OF REINFORCING IS REQUIRED.
         ii. NON STRUCTURAL SLABS SUPPORT DIRECTLY ON GROUND.
      b. PLACEMENT OF REINFORCING STEEL.
      c. BOLTS TO BE INSTALLED IN CONCRETE PRIOR TO AND DURING PLACEMENT OF CONCRETE.
      d. PLACEMENT OF CONCRETE
      e. INSPECTION FOR MAINTENANCE OF SPECIFIED CURING TEMPERATURE AND TECHNIQUES.
   2. MASONRY CONSTRUCTION
      a. PLACEMENT OF REINFORCING STEEL.
      b. MORTAR AND MORTAR JOINTS
      c. PLACEMENT OF GROUT
   3. WELDING - STRUCTURAL STEEL
   4. SEISMIC ANCHORAGE RESISTANCE OF MECHANICAL AND ELECTRICAL COMPONENTS
   5. SEE DRAWINGS FROM OTHER DISCIPLINES FOR NON-STRUCTURAL SPECIAL INSPECTION REQUIREMENTS

FOUNDATION:

A. FOUNDATION DESIGN IS BASED ON VALUES FROM THE SOILS INVESTIGATION REPORT FOR PROPOSED WASH RACK AND PHOTOVOLTAIC SYSTEM HAWAII ARMY NATIONAL GUARD ARMY AVIATION SUPPORT FACILITY BUILDING 30 BY YOGI KWONG ENGINEERS, DATED JANUARY 2020.
A. CONTRACTOR SHALL PROVIDE FOR DE-WATERING OF EXCAVATION FROM SURFACE WATER, GROUND WATER OR SEEPAGE.
B. EXCAVATED SUBGRADES FOR THE SLAB AND FOUNDATIONS SHOULD BE SCARIFIED TO A MINIMUM DEPTH OF 6 INCHES BELOW THE CLEARED OR FOUNDATION SUBGRADE SURFACE, MOISTURE CONDITIONED TO WITHIN 2 PERCENT ABOVE OPTIMUM MOISTURE CONTENT, AND PROPERLY RE-COMPACTED TO A MINIMUM 95 PERCENT RELATIVE COMPACTION. ANY RAIN-IMPACTED SUBGRADE MUST BE ADEQUATELY DRIED AND PROPERLY RE-COMPACTED PRIOR TO FOOTING CONCRETE POUR. ANY UNSUITABLE MATERIALS OR BOULDERS ENCOUNTERED AT OR IMMEDIATELY BELOW THE CLEARED OR RECOMPACTED SUBGRADE SURFACE SHOULD BE REMOVED TO A MINIMUM DEPTH OF 24 INCHES, REPLACED WITH IMPORTED SELECT BORROW BACKFILL AND COMPACTED TO A MINIMUM OF 95 PERCENT RELATIVE COMPACTION. SOFT OR PUMPING SUBGRADES, IF ENCOUNTERED, SHOULD BE OVER-EXCAVATED TO A MINIMUM DEPTH OF 24 INCHES AND REPLACED TO THE PROPOSED GRADE WITH CLEAN, GRANULAR BASALT GRAVEL SUCH AS ASTM C33/33M SIZE NUMBER 67 AGGREGATE, WRAPPED IN A SUITABLE GEOTEXTILE FABRIC SUCH AS MIRAFI 140N OR EQUIVALENT.
C. UNLESS NOTED OTHERWISE, THE MINIMUM DEPTH OF FOOTINGS BELOW THE UNDISTURBED GROUND SURFACE SHALL BE 12 INCHES.

CONCRETE:

A. CONCRETE CONSTRUCTION SHALL CONFORM TO AMERICAN CONCRETE INSTITUTE ACI 318
B. CONCRETE SHALL BE REGULAR WEIGHT HARD ROCK CONCRETE AND SHALL HAVE THE FOLLOWING MINIMUM 28 DAY COMPRESSIVE STRENGTHS:
   1. FOOTINGS AND WALLS:---------------------------------- 4000 PSI
   2. SLAB-ON-GRADE:-------------------------------------- 4000 PSI
   4. ALL OTHER CONCRETE:---------------------------------- 3000 PSI
C. CONCRETE DELIVERY TICKETS SHALL RECORD ALL FREE WATER IN THE MIX: AT BATCHING BY PLANT, FOR CONSISTENCY BY DRIVER, AND ANY ADDITIONAL REQUEST BY CONTRACTOR IF PERMITTED BY THE MIX DESIGN.
D. WATER USED IN MIXING CONCRETE SHALL BE CLEAN AND FREE FROM INJURIOUS AMOUNTS OF OILS, ACIDS, ALKALIS, SALTS, ORGANIC MATERIALS OR OTHER SUBSTANCES THAT ARE DELETERIOUS TO CONCRETE OR STEEL REINFORCEMENT.
E. FREQUENCY OF CONDUCTING STRENGTH TESTS SHALL BE AS FOLLOWS:
   1. SAMPLES FOR STRENGTH OF EACH CLASS OF CONCRETE PLACED EACH DAY SHALL BE TAKEN NOT LESS THAN ONCE A DAY, NOR LESS THAN ONCE FOR EACH 150 CUBIC YARDS OF CONCRETE, NOR LESS THAN ONCE FOR EACH 5,000 SQUARE FEET OF SURFACE AREA FOR SLABS OR WALLS.
   2. IF THE TOTAL VOLUME OF CONCRETE IS SUCH THAT THE FREQUENCY OF TESTING WOULD PROVIDE LESS THAN FIVE STRENGTH TESTS FOR A GIVEN CLASS OF CONCRETE, TESTS SHALL BE MADE FROM AT LEAST FIVE RANDOMLY SELECTED BATCHES OR FROM EACH BATCH IF FEWER THAN FIVE BATCHES ARE USED.
F. ALL INSERTS, ANCHOR BOLTS, PLATES, AND OTHER ITEMS TO BE CAST IN THE CONCRETE SHALL BE HOT-DIPPED GALVANIZED ACCORDING TO ASTM A153 UNLESS OTHERWISE NOTED.
G. REINFORCING BARS, ANCHOR BOLTS, INSERTS, AND OTHER ITEMS TO BE CAST IN THE CONCRETE SHALL BE SECURED IN POSITION PRIOR TO PLACEMENT OF CONCRETE.
H. CONDUITS, PIPES, AND SLEEVES PASSING THROUGH A SLAB OR FOOTING AND NOT CONFORMING TO TYPICAL DETAILS SHALL BE LOCATED AND SUBMITTED TO THE ARCHITECT FOR APPROVAL.
I. CONDUITS, PIPES, AND SLEEVES EMBEDDED WITHIN A SLAB OR WALL (OTHER THAN THOSE MERELY PASSING THROUGH) SHALL SATISFY THE FOLLOWING:
   1. NO LARGER IN OUTSIDE DIMENSIONS THAN 1/3 THE OVERALL THICKNESS OF SLAB, OR WALL IN WHICH THEY ARE EMBEDDED.
   2. CONDUITS, PIPES, AND SLEEVES SHALL NOT BE PLACED THROUGH OR EMBEDDED IN A BEAM UNLESS SPECIFICALLY DETAILED.
   3. SPACED NO CLOSER THAN 3 DIAMETERS OR WIDTHS ON CENTER.
   4. PLACED IN THE MIDDLE 1/3 OF SLAB OR WALL THICKNESS.
J. THE CONTRACTOR SHALL LOCATE CONSTRUCTION JOINTS SO AS NOT TO IMPAIR THE STRENGTH OF THE STRUCTURE AND TO MINIMIZE SHRINKAGE STRESSES. SUBMIT LOCATION OF CONSTRUCTION JOINTS TO THE ARCHITECT FOR APPROVAL, UNLESS OTHERWISE NOTED.
K. ALL EXPOSED CORNERS SHALL HAVE ¾ INCH CHAMFERS, UNLESS SPECIFICALLY DETAILED OTHERWISE.
L. SEE ARCHITECTURAL DRAWINGS FOR CHAMFERS, EDGE RADII, DRIPS, REGLETS, FINISHES AND OTHER NON-STRUCTURAL ITEMS NOT SHOWN OR SPECIFIED ON THE STRUCTURAL DRAWINGS.
M. NON-SHRINK GROUT SHALL BE A PREMIXED NON-METALLIC FORMULA, CAPABLE OF DEVELOPING A MINIMUM COMPRESSIVE STRENGTH OF 3,000 PSI IN 1 DAY AND 5,000 PSI IN 28 DAYS IN CONFORMANCE WITH ASTM C1107..
N. CONSTRUCTION JOINTS IN FLOOR SHALL BE LOCATED WITHIN THE MIDDLE THIRD OF SPANS OF SLABS, BEAMS AND GIRDERS. JOINTS IN GIRDERS SHALL BE OFFSET A MINIMUM DISTANCE OF TWO TIMES THE WIDTH OF AN INTERSECTING BEAM.
O. LEAVE FORMWORK FOR BEAM SOFFITS, JOISTS, SLABS, AND OTHER STRUCTURAL ELEMENTS THAT SUPPORT WEIGHT OF CONCRETE IN PLACE UNTIL CONCRETE HAS ACHIEVED ITS 28 DAY DESIGN COMPRESSIVE STRENGTH.
P. A POSITIVE SEPARATION JOINT SHALL BE PROVIDED BETWEEN THE EXTERIOR WALKWAY SLABS AND THE BUILDING CONSTRUCTION WITH A ½-INCH JOINT FILLER, UNLESS NOTED OTHERWISE. JOINT FILLER SHALL BE ASTM D1751 OR ASTM D994; ASPHALT IMPREGNATED FIBERBOARD OR FELT.

REINFORCING STEEL:

A. REINFORCING STEEL SHALL BE DEFORMED BARS CONFORMING TO ASTM A615, GRADE 60.
B. WELDED REINFORCING STEEL SHALL BE LOW-ALLOY DEFORMED BARS CONFORMING TO ASTM A706.
C. WELDED WIRE REINFORCEMENT SHALL BE GALVANIZED CONFORMING TO ASTM A185.
D. CLEAR CONCRETE COVER FOR REINFORCING BARS SHALL BE AS FOLLOWS, UNLESS OTHERWISE NOTED:
   1. CONCRETE CAST AGAINST AND PERMANENTLY EXPOSED TO EARTH:----- 3"
   2. CONCRETE FORMED AND EXPOSED TO EARTH OR WEATHER:----------3"
   3. CONCRETE NOT EXPOSED TO WEATHER OR IN CONTACT WITH GROUND:
      a. SLABS:
         ii. NO. 11 BAR AND SMALLER:--------------------------- 1"
      b. BEAMS, COLUMNS:
         i. PRIMARY REINFORCEMENT, TIES, STIRRUPS, SPIRALS:---------- 2"
E. CLEAR DISTANCE BETWEEN THE SURFACE OF A BAR AND ANY SURFACE OF A MASONRY UNIT SHALL BE NOT LESS THAN 1/2 INCH, UNLESS OTHERWISE NOTED.
F. REINFORCING STEEL SHALL BE SPLICED WHERE INDICATED ON PLANS. PROVIDE LAP SPLICE LENGTH PER TYPICAL DETAILS AND SCHEDULE, UNLESS OTHERWISE NOTED.
G. LAP EDGES AND ENDS OF ADJOINING SHEETS OF WELDED WIRE REINFORCEMENT AT LEAST ONE MESH SPACING. OFFSET LAPS OF ADJOINING SHEET WIDTHS TO PREVENT CONTINUOUS LAPS IN EITHER DIRECTION.
H. MECHANICAL SPLICE CONNECTORS SHALL DEVELOP IN TENSION 125 PERCENT OF THE SPECIFIED MINIMUM YIELD STRENGTH OF REINFORCING BARS.
I. STANDARD HOOKS ON REINFORCING BARS USED SHALL COMPLY WITH TYPICAL DETAIL.
J. MINIMUM REINFORCEMENT BEND DIAMETERS SHALL COMPLY WITH TYPICAL DETAIL.

MASONRY:

A. CONCRETE MASONRY UNITS SHALL CONFORM TO ASTM C90 FOR LOAD-BEARING CONCRETE MASONRY UNITS NORMAL WEIGHT WITH A UNIT COMPRESSIVE STRENGTH OF 1900 PSI.
B. SECOND-HAND MASONRY UNITS SHALL NOT BE REUSED UNLESS THEY CONFORM TO THE REQUIREMENTS OF NEW UNITS. THE UNITS SHALL BE OF WHOLE, SOUND MATERIALS AND FREE FROM CRACKS AND OTHER DEFECTS THAT WILL INTERFERE WITH PROPER LAYING AND USE. OLD MORTAR SHALL BE CLEANED FROM THE UNIT BEFORE REUSE.
C. MORTAR FOR USE IN MASONRY CONSTRUCTION SHALL CONFORM TO ASTM C270 WITH A MINIMUM COMPRESSIVE STRENGTH OF 1,800 PSI. UNUSED MORTAR SHALL BE DISCARDED WITHIN 2 1/2 HOURS AFTER INITIAL MIXING. MORTAR SHALL BE TYPE S.
D. GROUT SHALL CONFORM TO ASTM C476 WITH A MINIMUM COMPRESSIVE STRENGTH OF 2,000 PSI AT 28 DAYS.
E. ALL CELLS AND BOND COURSES SHALL BE SOLID GROUTED. CLEANOUTS SHALL BE PROVIDED FOR ALL GROUT POURS OVER 5'-4" IN HEIGHT.
F. WHEN GROUTING IS STOPPED FOR ONE HOUR OR LONGER, HORIZONTAL CONSTRUCTION JOINTS SHALL BE FORMED BY STOPPING THE GROUT POUR 1 1/2 INCHES BELOW THE TOP OF THE UPPERMOST UNIT.
G. WALLS SHALL BE CONSTRUCTED IN CONVENTIONAL RUNNING BOND, UNLESS OTHERWISE NOTED.
H. SEE ARCHITECTURAL DRAWINGS FOR LAYING PATTERN, HEIGHT OF UNITS, SURFACE TEXTURE, AND JOINT TYPE.
I. OPEN-ENDED BLOCKS MAY BE SUBSTITUTED FOR STANDARD CONCRETE MASONRY UNITS.
J. SHOP DRAWINGS SHALL BE SUBMITTED TO THE ENGINEER FOR REVIEW AND APPROVAL PRIOR TO FABRICATION. SHOP DRAWINGS SHALL INCLUDE LAYOUT OF MEMBERS, MEMBER SIZES, REINFORCING, CONNECTIONS DETAILS AND BRACING REQUIREMENTS.
K. FABRICATOR SHALL BE A PCI CERTIFIED PLANT.

STRUCTURAL STEEL:

D. FABRICATION AND ERECTION OF STRUCTURAL STEEL SHALL CONFORM TO THE AMERICAN INSTITUTE OF STEEL CONSTRUCTION MANUAL OF STEEL CONSTRUCTION, THIRTEENTH EDITION.
E. STRUCTURAL STEEL SHALL CONFORM TO THE FOLLOWING, UNLESS OTHERWISE NOTED.
   1. STEEL WIDE FLANGE SECTION ------------------------ ASTM A992
   2. CHANNELS, ANGLES, PLATES, AND BARS ----------------- ASTM A36
   3. STEEL PIPES ---------------------------------- ASTM A53, GRADE B
   4. HOLLOW STRUCTURAL STEEL ------------------------ ASTM A500, GRADE B
C. BOLTS SHALL CONFORM TO ASTM A325 UNLESS OTHERWISE NOTED.
D. STAINLESS STEEL BOLTS OR THREADED ROD SHALL CONFORM TO ASTM F593, TYPE 316, AND STAINLESS STEEL NUTS TO ASTM F594, TYPE 316.
E. WELDS AND WELDING PROCEDURES SHALL CONFORM TO THE STRUCTURAL WELDING CODE AWS D1.1 OF THE AMERICAN WELDING SOCIETY.
F. WELDING SHALL BE PERFORMED BY WELDERS PRE-QUALIFIED FOR WELDING PROCEDURES TO BE USED.
G. WELDING ELECTRODES SHALL BE E70XX.
H. ALL STEEL SHALL BE HOT-DIP GALVANIZED AFTER FABRICATION ACCORDING TO ASTM A123.
I. ALL ANCHOR BOLTS, PLATES, AND OTHER ITEMS TO BE CAST IN CONCRETE OR MASONRY SHALL BE HOT-DIP GALVANIZED ACCORDING TO ASTM A153 UNLESS OTHERWISE NOTED.

ABBREVIATIONS:

C.J.	CONSTRUCTION JOINT
CLR.	CLEAR
CONC.	CONCRETE
CONT.	CONTINUOUS
ELEC	ELECTRICAL
ELEV	ELEVATION
EW	EACH WAY
(E)	EXISTING
FTG.	FOOTING
GALV.	GALVANIZED
HDG	HOT-DIPPED GALVANIZED
HT	HEIGHT
MAX	MAXIMUM
MECH	MECHANICAL
MIN.	MINIMUM
SQ.	SQUARE
SPEC	SPECIFICATION
SS	STAINLESS STEEL
THK.	THICK
T.O.M	TOP OF MASONRY
TYP.	TYPICAL
ø	DIAMETER

KAI HAWAII STRUCTURAL & FORENSIC ENGINEERS
50 S. Beretania Street, #C-119C
Honolulu, HI 96813
Phone: (808)533-2210

JERRY S FUJITA
LICENSED PROFESSIONAL ENGINEER
No. 11573-S
HAWAII, U.S.A.
THIS WORK WAS PREPARED BY ME OR UNDER MY SUPERVISION AND CONSTRUCTION OF THIS PROJECT WILL BE UNDER MY OBSERVATION.
[signature]
SIGNATURE | 4/30/2020 LICENSE EXPIRES

SYM	DESCRIPTION	DATE	APPR

SUBMITTAL PHASE: BID SET
SUBMITTAL DATE: 03/23/2020
DES GE | DRW GE | CHK JF

STATE OF HAWAII
DEPARTMENT OF DEFENSE
FACILITY MANAGEMENT OFFICE
DESIGN AND PROJECT MANAGEMENT BRANCH
HAWAII ARMY NATIONAL GUARD
KALAELOA OAHU
ARMY AVIATION SUPPORT FACILITY BUILDING 30
STRUCTURAL GENERAL NOTES

SCALE: AS NOTED
STATE JOB NO. CA-1825-C
FEDERAL PROJECT NO. 15190024
SHEET 32 OF 57
S100

MINIMUM SPLICE AND DEVELOPMENT LENGTHS										
BAR SIZE	CONCRETE STRENGTH = 3,000 PSI					CONCRETE STRENGTH = 4,000 PSI				
	LAP SPLICE		DEVELOPMENT			LAP SPLICE		DEVELOPMENT		
	TOP BARS	OTHER BARS	STRAIGHT TOP BARS	STRAIGHT OTHER BARS	WITH STANDARD HOOK	TOP BARS	OTHER BARS	STRAIGHT TOP BARS	STRAIGHT OTHER BARS	WITH STANDARD HOOK
#3	28"	22"	22"	18"	6"	26"	20"	20"	16"	6"
#4	38"	30"	30"	22"	8"	34"	26"	26"	20"	8"
#5	48"	36"	36"	28"	10"	42"	32"	32"	24"	10"
#6	56"	44"	44"	34"	12"	50"	38"	38"	30"	12"
#7	82"	64"	64"	48"	14"	72"	54"	54"	42"	14"
#8	94"	72"	72"	56"	16"	82"	62"	62"	48"	16"
#9	106"	82"	82"	62"	19"	92"	70"	70"	54"	19"
#10	118"	92"	92"	70"	22"	102"	80"	80"	62"	22"
#11	132"	102"	102"	78"	24"	114"	88"	88"	68"	24"

NOTES:
1. IF CONCRETE COVER IS NOT GREATER THAN THE DIAMETER OF THE BAR OR THE CENTER-TO-CENTER SPACING IS NOT GREATER THAN 3 BAR DIAMETERS THEN VALUES SHALL BE INCREASED BY 50%.
2. "TOP BARS" ARE HORIZONTAL BARS WITH 12" OR MORE OF CONCRETE CAST BELOW.

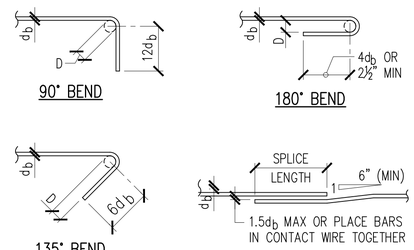

TYPICAL REBAR SPLICE AND DEVELOPMENT LENGTH SCHEDULE

1 / S200 NOT TO SCALE

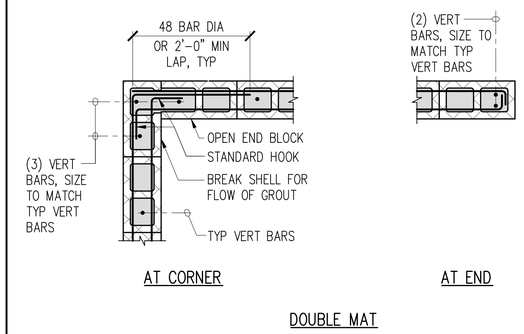

CMU WALL REINFORCING AT BOND BEAM

2 / S200 NOT TO SCALE

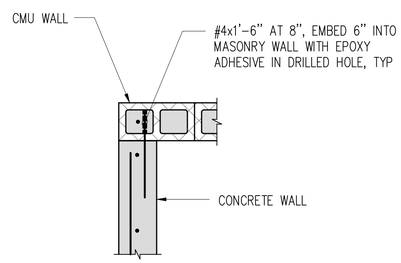

CMU WALL TO CONCRETE WALL REINFORCING

3 / S200 NOT TO SCALE

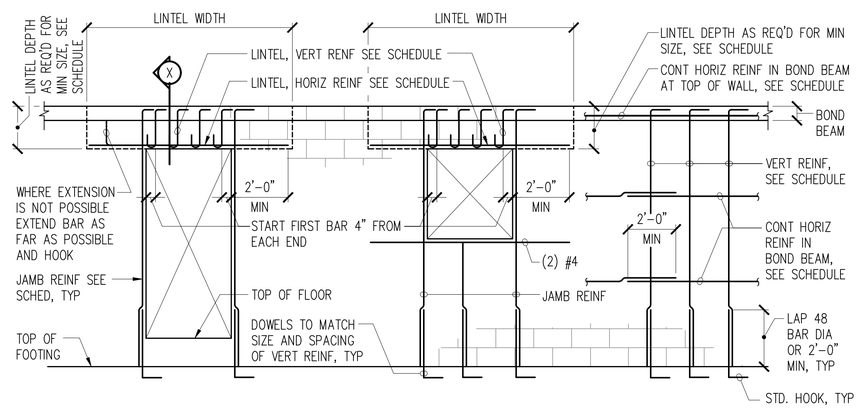

TYPICAL CMU WALL ELEVATION DETAIL

4 / S200 NOT TO SCALE

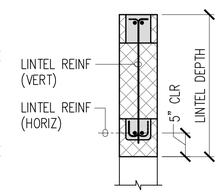

X SECTION
NOT TO SCALE

NOTE: ALL WALLS SHALL BE SOLID GROUTED.

CMU WALL REINFORCING SCHEDULE			
WALL THICKNESS (INCHES)	BAR SIZE AND SPACING		
	HORIZ	VERT	REMARKS
8	(2) #4 AT 48"	#4 AT 16"	EXTERIOR WALLS

OPENING SCHEDULE					
OPENING WIDTH	LINTEL DEPTH (MINIMUM)	REINFORCING			
		JAMB	LINTEL HORIZ	LINTEL VERT	REMARKS
W < 5'-0"	2'-8"	(2) #4	(2) #4	#4 AT 8"	
5'-1" < W < 7'-0"	2'-8"	(2) #5	(2) #5	#4 AT 8"	
7'-1" < W < 9'-0"	4'-0"	(2) #6	(2) #8	#5 AT 8"	

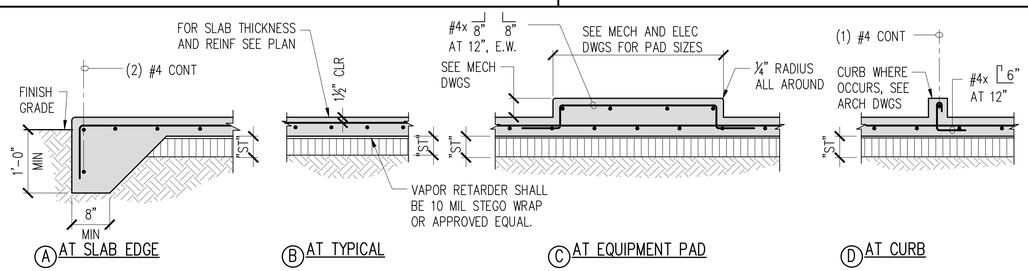

SUBGRADE SCHEDULE				
MARK	"ST"	MATERIAL	VAPOR RETARDER	REMARKS
SB-1	6"	SELECT BORROW	NO	AT EQUIPMENT BUILDING
SB-2	6"	SELECT BORROW	NO	TYPICAL UNLESS NOTED OTHERWISE

SLAB ON GRADE NOTES:
1. THICKNESS OF SLAB-ON-GRADE SHOWN IS MINIMUM AND SHALL BE MAINTAINED AT ALL SLOPED AND DEPRESSED AREAS.
2. FOR FLOOR ELEVATIONS, DEPRESSED SLABS LOCATIONS, SLOPES TO DRAIN, AND EQUIPMENT PAD AND CURB LOCATIONS SEE ARCHITECTURAL, ELECTRICAL AND MECHANICAL DRAWINGS.

TYPICAL SLAB-ON-GRADE DETAILS

5 / S200 NOT TO SCALE

NOTE: SAW CUTTING SHALL OCCUR AS SOON AS CONCRETE SURFACE IS FIRM ENOUGH TO NOT BE TORN BY CUTTING BLADE AND BEFORE SHRINKAGE CRACKING OCCURS, BUT NO LATER THAN 12 HOURS AFTER CONCRETE HAS BEEN POURED.

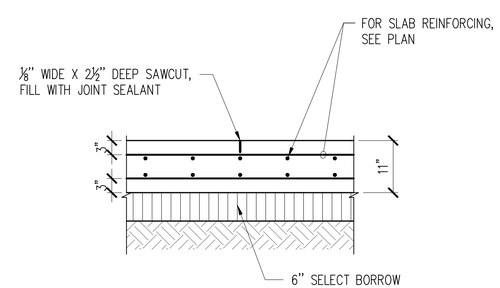

TYPICAL CONTROL JOINT

6 / S200 SCALE: 3/4" = 1'-0"

STRUCTURAL & FORENSIC ENGINEERS
50 S. Beretania Street, #C-319C
Honolulu, HI 96817
Phone (808)533-2210

JERRY S FUJITA
LICENSED PROFESSIONAL ENGINEER
No. 11573-S
HAWAII, U.S.A.
THIS WORK WAS PREPARED BY ME OR UNDER MY SUPERVISION
SIGNATURE 4/30/2020 LICENSE EXPIRES

SYM	DESCRIPTION	DATE	APPR

SUBMITTAL PHASE: BID SET
SUBMITTAL DATE: 03/23/2020
DES GE | DRW GE | CHK JF

DEPARTMENT OF DEFENSE
DESIGN AND PROJECT MANAGEMENT BRANCH
STATE OF HAWAII
FACILITY MANAGEMENT OFFICE

HAWAII ARMY NATIONAL GUARD
KALAELOA OAHU
ARMY AVIATION SUPPORT FACILITY BUILDING 30
TYPICAL DETAILS

SCALE: AS NOTED
STATE JOB NO. CA-1825-C
FEDERAL PROJECT NO. 15190024
SHEET 33 OF 57
S200

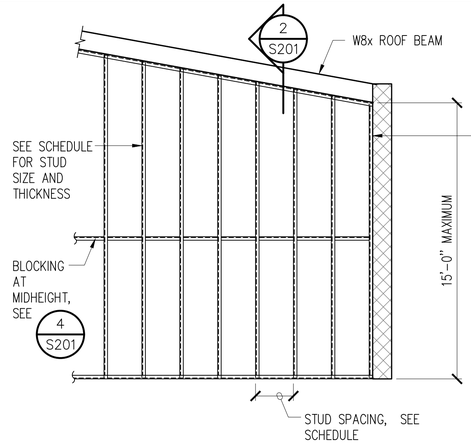

NON-STRUCTURAL WALL			
"H"	STUD SIZE	SPACING	REMARKS
15'-0"	350S162-54	24" MAX	TYPICAL

NOTES:
1. TRACK SHALL BE T125 AND THE SAME WIDTH AND GAUGE AS THE TYPICAL STUD.

1 S201 STUD WALL SCHEDULE

NOT TO SCALE

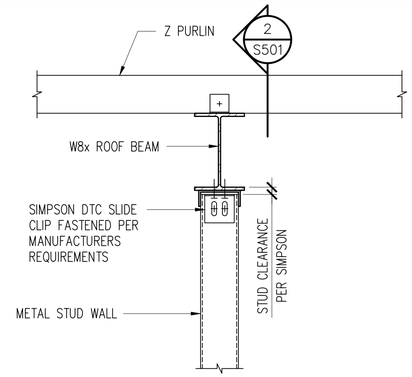

PERPENDICULAR TO PURLIN

2 S201 TOP TRACK CONNECTION

SCALE: 1-1/2" = 1'-0"

NOTES:
1. POWDER ACTUATED FASTENERS SHALL BE RAMSET 1512SDx11½" LONG OR APPROVED EQUAL.
2. POWDER ACTUATED FASTENERS SHALL BE INSTALLED AFTER CONCRETE HAS CURED FOR 7 DAYS OR AFTER CONCRETE HAS REACHED A MINIMUM COMPRESSIVE STRENGTH OF 2000 PSI.

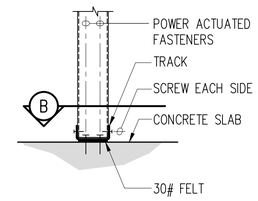

AT SLAB INTERIOR

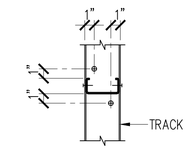

B SECTION

3 S201 TYPICAL BOTTOM TRACK DETAIL

NOT TO SCALE

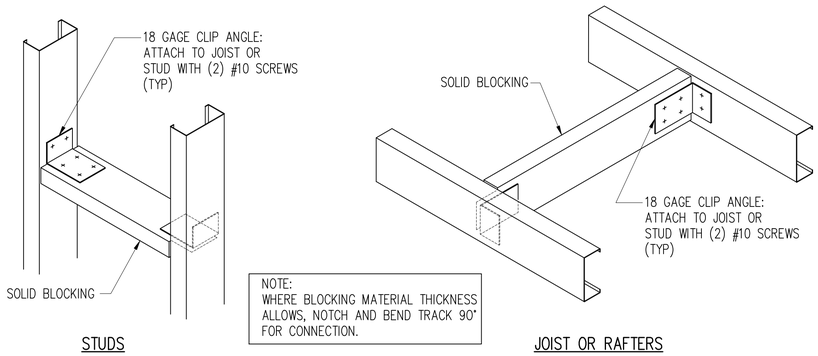

NOTE:
WHERE BLOCKING MATERIAL THICKNESS ALLOWS, NOTCH AND BEND TRACK 90° FOR CONNECTION.

STUDS

JOIST OR RAFTERS

4 S201 TYPICAL STUD AND JOIST BLOCKING

NOT TO SCALE

NOTES:
1. POWDER ACTUATED FASTENERS SHALL BE RAMSET 1512SDx11½" LONG OR APPROVED EQUAL.

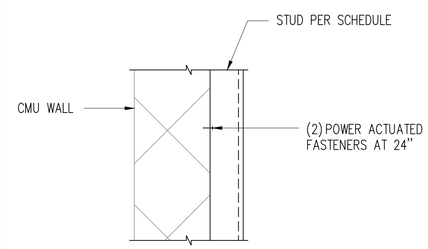

5 S201 WALL CONNECTION

SCALE: 1-1/2" = 1'-0"

HAWAII ARMY NATIONAL GUARD

GAI HAWAII STRUCTURAL & FORENSIC ENGINEERS
50 S. Beretania Street, #C-519C
Honolulu, HI 96813
Phone (808)533-2210

JERRY S FUJITA
LICENSED PROFESSIONAL ENGINEER
No. 11573-S
HAWAII, U.S.A.

THIS WORK WAS PREPARED BY ME OR UNDER MY SUPERVISION
Jerry S Fujita 4/30/2020
SIGNATURE LICENSE EXPIRES

STM	DESCRIPTION	DATE	APPR

SUBMITTAL PHASE: BID SET

SUBMITTAL DATE: 03/23/2020

DES GE | DRW GE | CHK JF

STATE OF HAWAII
FACILITY MANAGEMENT OFFICE

DEPARTMENT OF DEFENSE
DESIGN AND PROJECT MANAGEMENT BRANCH

HAWAII ARMY NATIONAL GUARD

KALAELOA
OAHU

ARMY AVIATION SUPPORT FACILITY BUILDING 30

COLD FORMED STEEL FRAMING TYPICAL DETAILS

SCALE: AS NOTED

STATE JOB NO. CA-1825-C

FEDERAL PROJECT NO. 15190024

SHEET 34 OF 57

S201

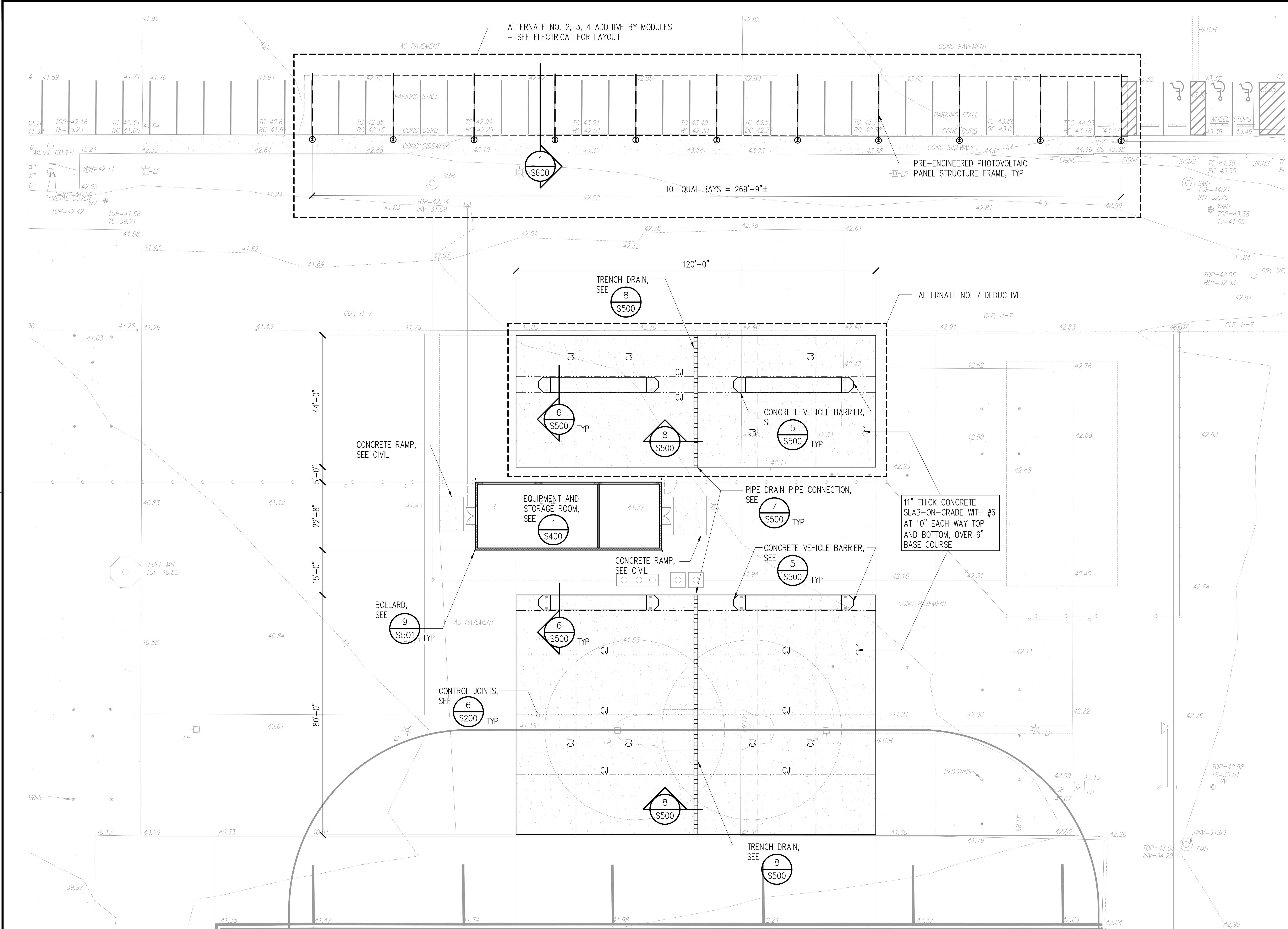

1 S300 STRUCTURAL SITE PLAN

SCALE: 1/16" = 1'–0"

KAI HAWAII STRUCTURAL & FORENSIC ENGINEERS
50 S. Beretania Street, #C-119C
Honolulu, HI 96813
Phone: (808)533-2210

JERRY S FUJITA
LICENSED PROFESSIONAL ENGINEER
No. 11573–S
HAWAII, U.S.A.

4/30/2020 LICENSE EXPIRES

SUBMITTAL PHASE: BID SET

SUBMITTAL DATE: 03/23/2020

DES: GE | DRW: GE | CHK: JF

DEPARTMENT OF DEFENSE
DESIGN AND PROJECT MANAGEMENT BRANCH

STATE OF HAWAII
FACILITY MANAGEMENT OFFICE

KALAELOA
OAHU

HAWAII ARMY NATIONAL GUARD

ARMY AVIATION SUPPORT FACILITY BUILDING 30

STRUCTURAL SITE PLAN

SCALE: AS NOTED

STATE JOB NO. CA–1825–C

FEDERAL PROJECT NO. 15190024

SHEET 35 OF 57

S300

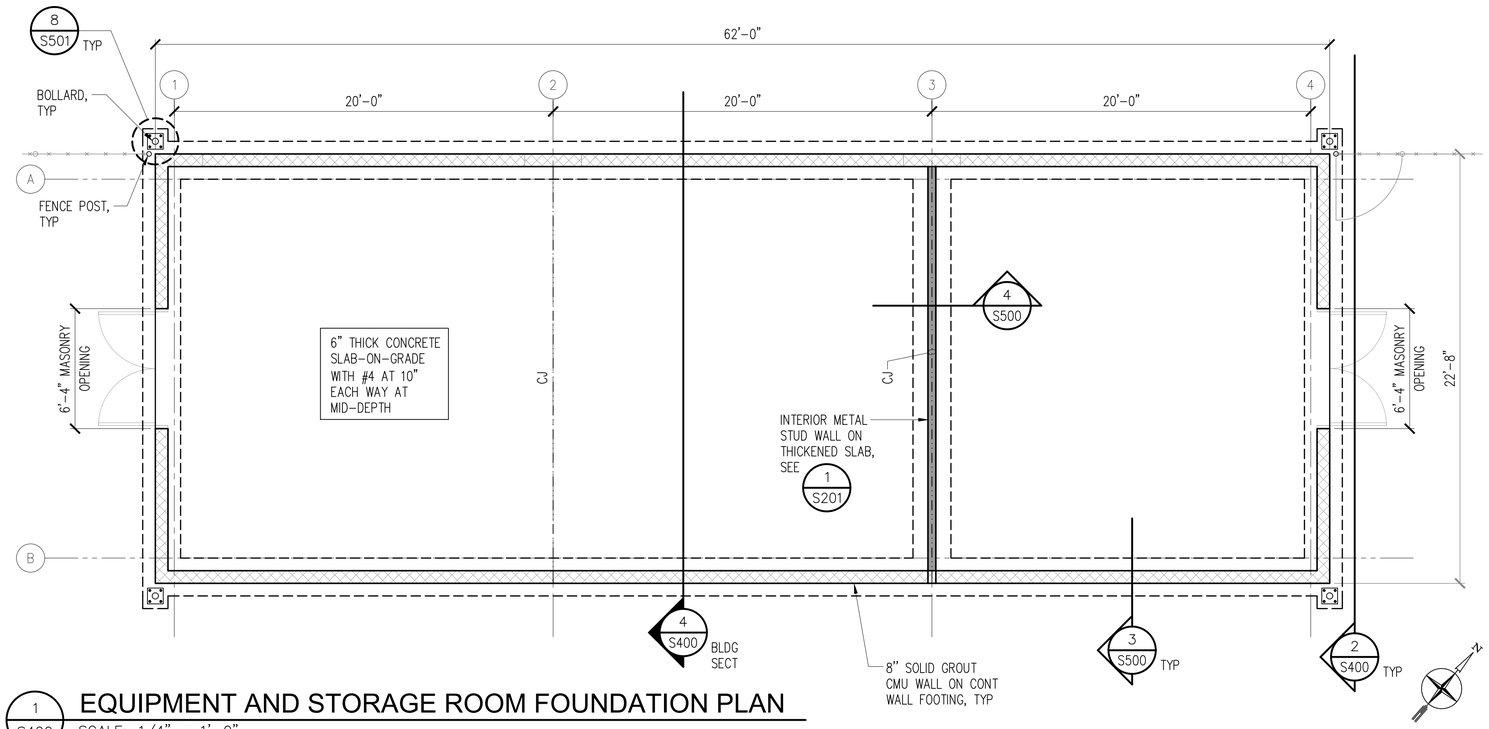

1 S400 EQUIPMENT AND STORAGE ROOM FOUNDATION PLAN

SCALE: 1/4" = 1'-0"

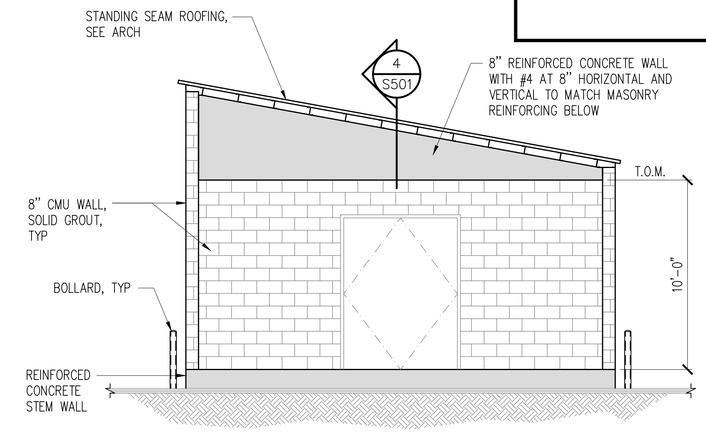

2 S400 EAST BUILDING ELEVATION

SCALE: 1/4" = 1'-0"

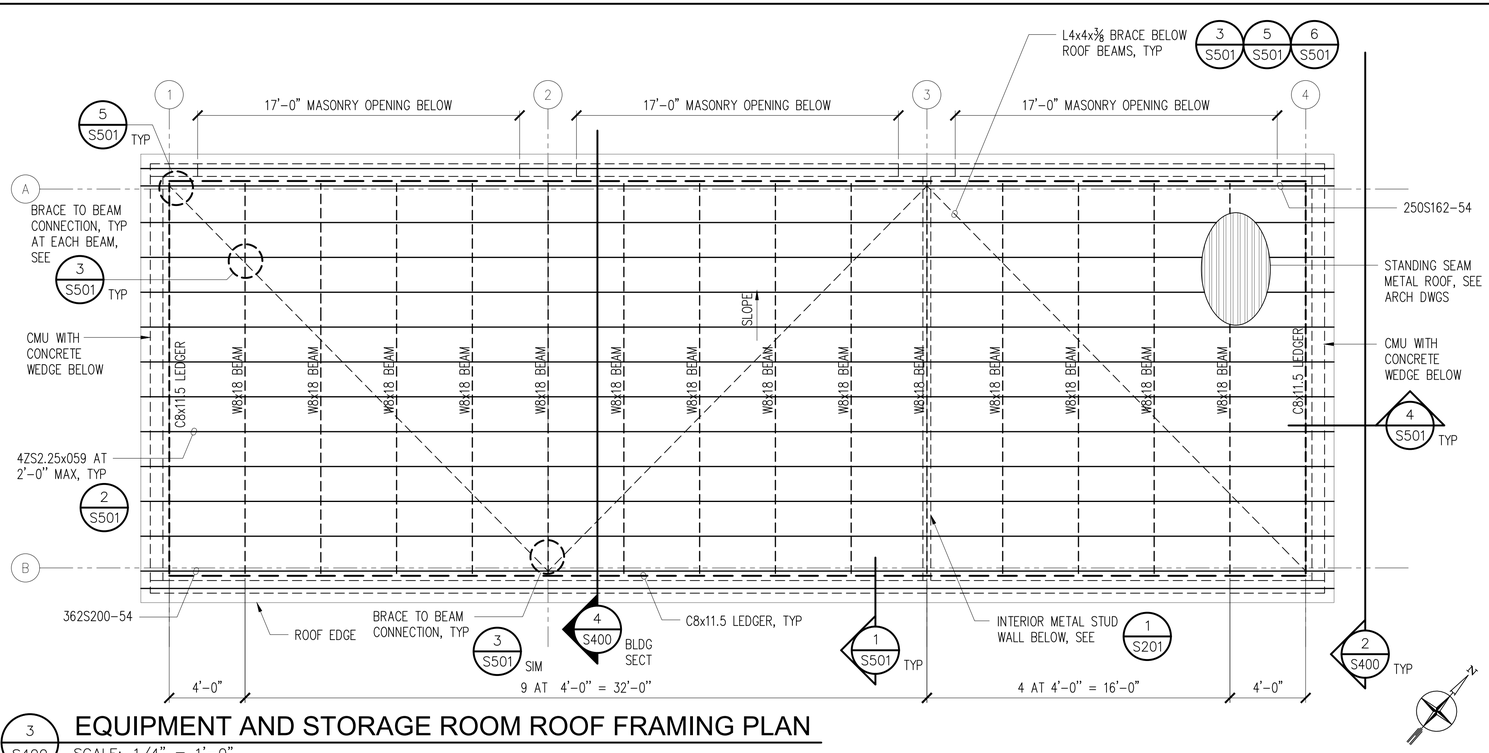

3 S400 EQUIPMENT AND STORAGE ROOM ROOF FRAMING PLAN

SCALE: 1/4" = 1'-0"

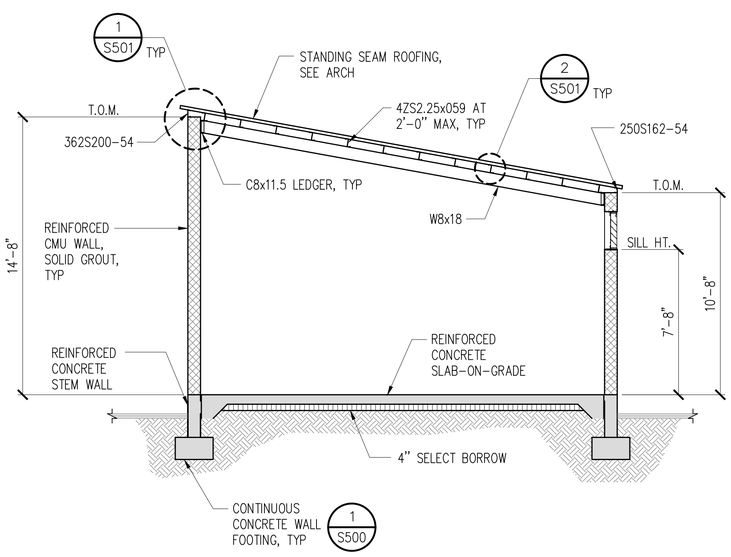

4 S400 BUILDING CROSS SECTION

SCALE: 1/4" = 1'-0"

STRUCTURAL & FORENSIC ENGINEERS
50 S. Beretania Street, #C-319C
Honolulu, HI 96813
Phone (808)533-2210

JERRY S FUJITA
LICENSED PROFESSIONAL ENGINEER
No. 11573-S
HAWAII, U.S.A.

THIS WORK WAS PREPARED BY ME OR UNDER MY SUPERVISION AND I AM A DULY LICENSED PROFESSIONAL ENGINEER UNDER THE LAWS OF THE STATE OF HAWAII

4/30/2020

SIGNATURE — LICENSE EXPIRES

SYM	DESCRIPTION	DATE	APPR

SUBMITTAL PHASE: BID SET

SUBMITTAL DATE: 03/23/2020

DES GE | DRW GE | CHK JF

DEPARTMENT OF DEFENSE
DESIGN AND PROJECT MANAGEMENT BRANCH
STATE OF HAWAII
FACILITY MANAGEMENT OFFICE

HAWAII ARMY NATIONAL GUARD

KALAELOA
OAHU

ARMY AVIATION SUPPORT FACILITY BUILDING 30

BUILDING FOUNDATION AND ROOF FRAMING PLAN, SECTION

SCALE: AS NOTED

STATE JOB NO. CA-1825-C

FEDERAL PROJECT NO. 15190024

SHEET 36 OF 57

S400

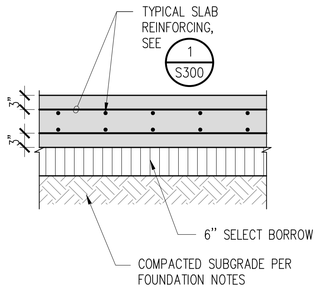

1 S500 WASH RACK SLAB
SCALE: 3/4" = 1'-0"

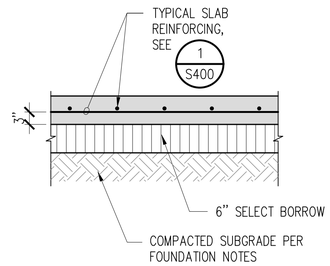

2 S500 BUILDING SLAB
SCALE: 3/4" = 1'-0"

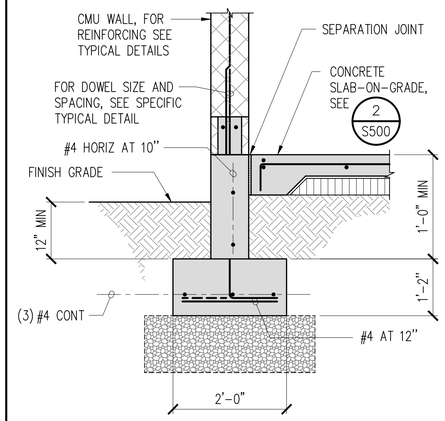

3 S500 WALL FOOTING
NOT TO SCALE

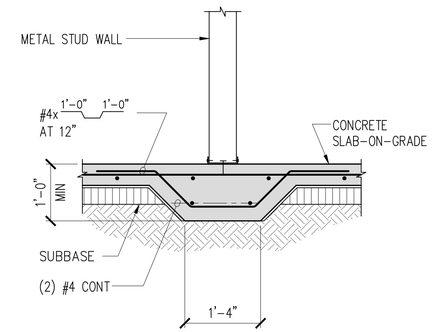

4 S500 THICKENED SLAB
SCALE: 3/4" = 1'-0"

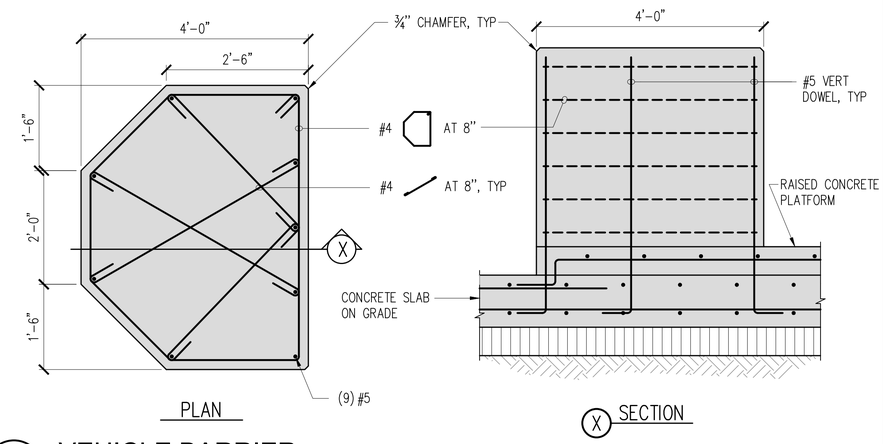

5 S500 VEHICLE BARRIER
SCALE: 3/4" = 1'-0"

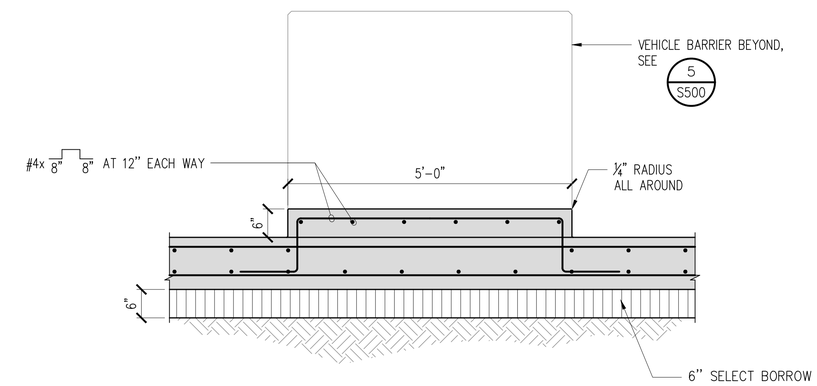

6 S500 RAISED CONCRETE WASH PLATFORM
NOT TO SCALE

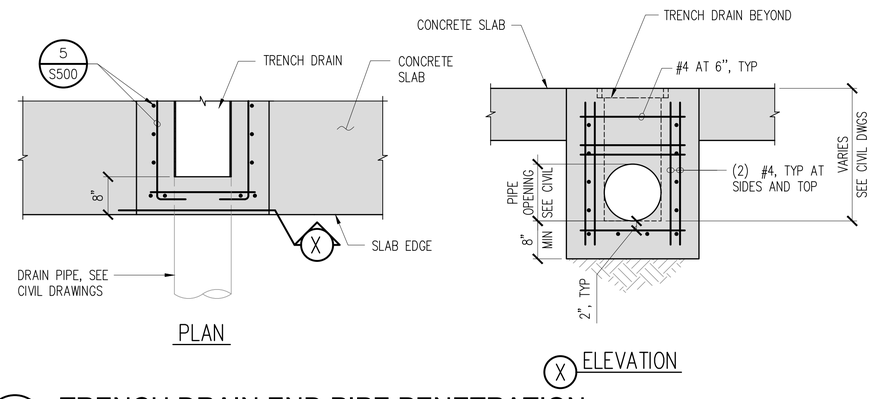

7 S500 TRENCH DRAIN END PIPE PENETRATION
SCALE: 3/4" = 1'-0"

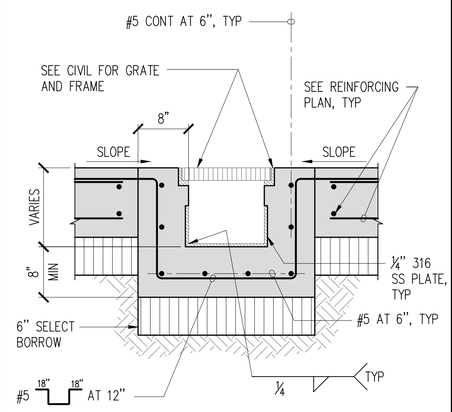

8 S500 TRENCH DRAIN
SCALE: 1" = 1'-0"

9 S500 NOT USED
SCALE:

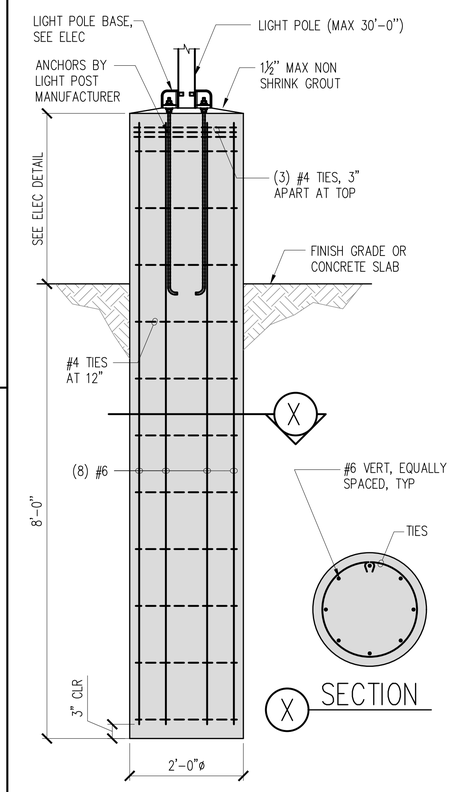

10 S500 LIGHT POLE FOUNDATION
NOT TO SCALE

HAWAII ARMY NATIONAL GUARD

GAI HAWAII STRUCTURAL & FORENSIC ENGINEERS
50 S. Beretania Street, #C-319C
Honolulu, HI 96817
Phone (808)533-2210

JERRY S FUJITA
LICENSED PROFESSIONAL ENGINEER
No. 11573-S
HAWAII, U.S.A.

THIS WORK WAS PREPARED BY ME OR UNDER MY SUPERVISION AND I ACCEPT RESPONSIBILITY FOR THE WORK.

SIGNATURE 4/30/2020 LICENSE EXPIRES

SYM	DESCRIPTION	DATE	APPR

SUBMITTAL PHASE: BID SET

SUBMITTAL DATE: 03/23/2020

DES GE | DRW GE | CHK JF

DEPARTMENT OF DEFENSE
DESIGN AND PROJECT MANAGEMENT BRANCH
STATE OF HAWAII
FACILITY MANAGEMENT OFFICE

HAWAII ARMY NATIONAL GUARD
KALAELOA OAHU
ARMY AVIATION SUPPORT FACILITY BUILDING 30

CONCRETE DETAILS

SCALE: AS NOTED

STATE JOB NO. CA-1825-C

FEDERAL PROJECT NO. 15190024

SHEET 37 OF 57

S500

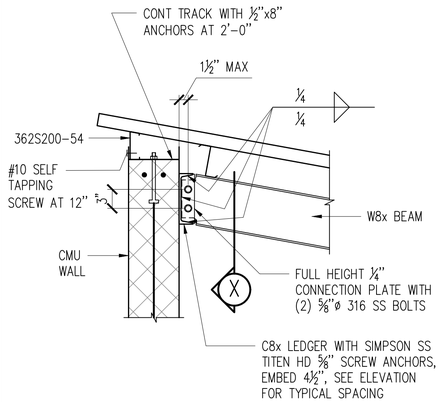

1 S501 **BEAM CONNECTION**
SCALE: 3/4" = 1'-0"

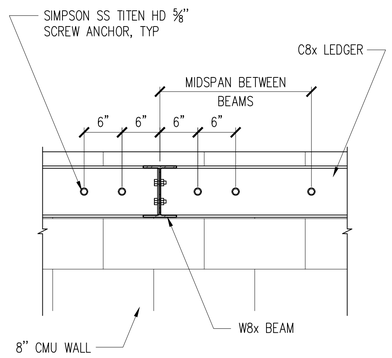

X ELEVATION

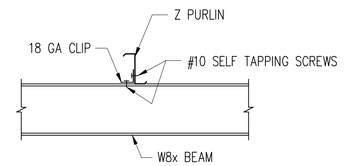

2 S501 **PURLIN CONNECTION**
SCALE: 3/4" = 1'-0"

NOTE: CONNECT BRACE AT EVERY BEAM

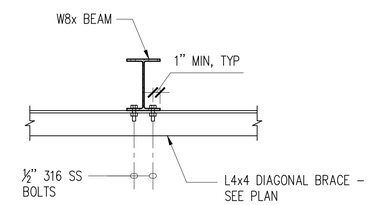

3 S501 **TYPICAL ROOF BRACE CONNECTION TO BEAM**
SCALE: 3/4" = 1'-0"

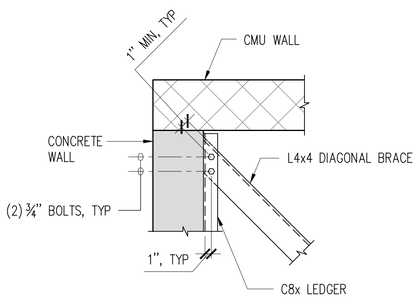

5 S501 **ROOF BRACE AT END WALL CONNECTION**
SCALE: 3/4" = 1'-0"

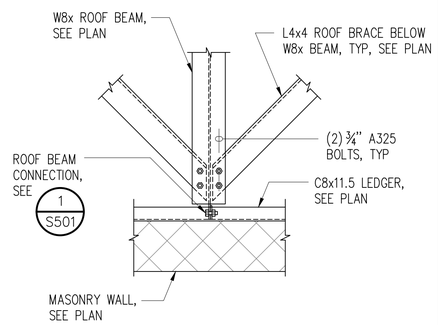

6 S501 **ROOF BRACE END CONNECTION AT BEAM**
SCALE: 3/4" = 1'-0"

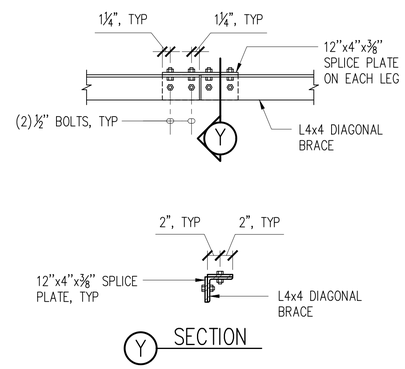

Y SECTION

7 S501 **ROOF BRACE SPLICE**
SCALE: 3/4" = 1'-0"

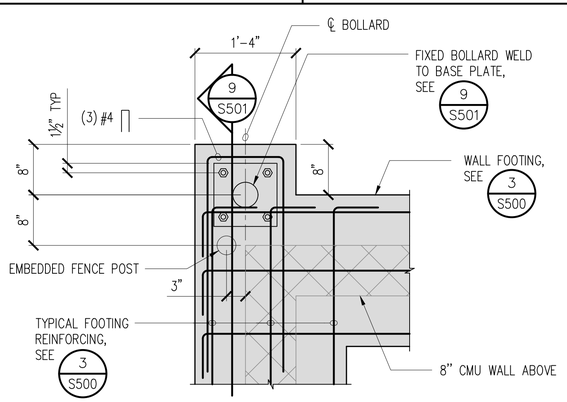

8 S501 **TYPICAL FOOTING CORNER PLAN**
SCALE: 3/4" = 1'-0"

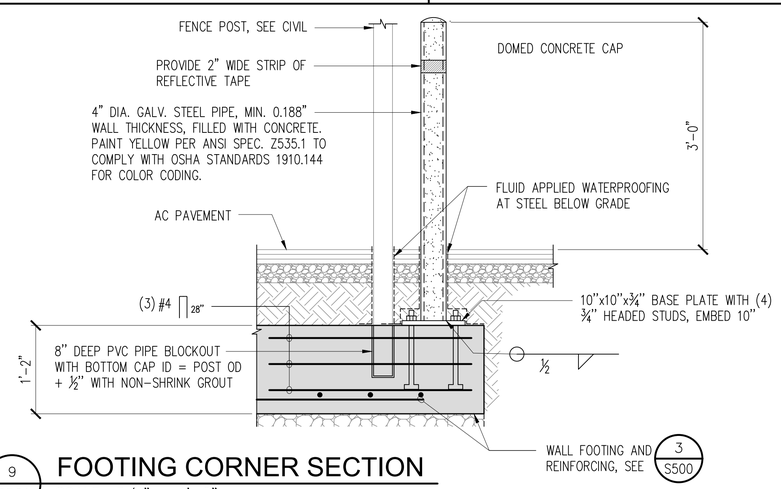

9 S501 **FOOTING CORNER SECTION**
SCALE: 3/4" = 1'-0"

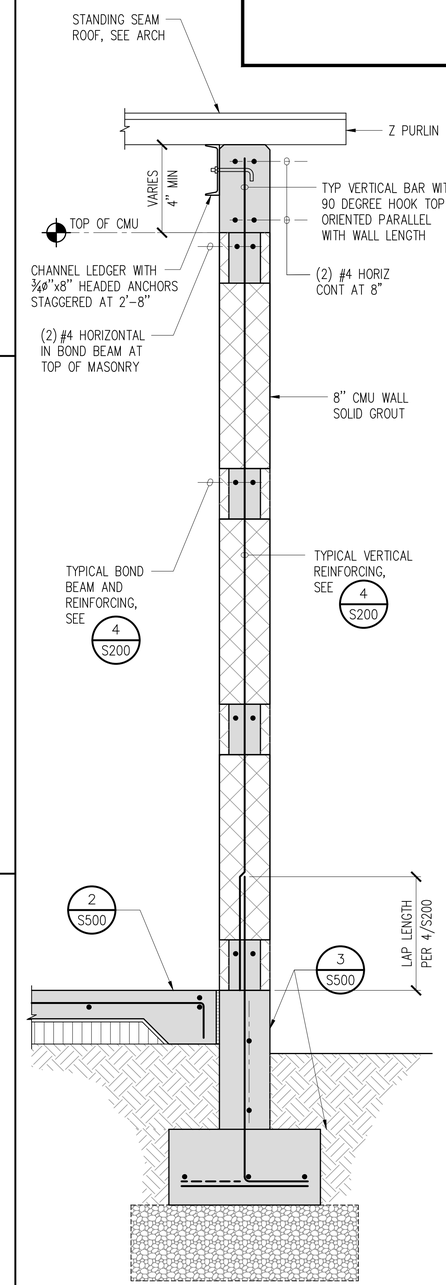

4 S501 **WALL SECTION**
SCALE: 3/4" = 1'-0"

HAWAII ARMY NATIONAL GUARD

GAI STRUCTURAL & FORENSIC ENGINEERS
HAWAII
50 S. Beretania Street, #C-319C
Honolulu, HI 96813
Phone (808)533-2210

JERRY S FUJITA
LICENSED PROFESSIONAL ENGINEER
No. 11573-S
HAWAII, U.S.A.
THIS WORK WAS PREPARED BY ME OR UNDER MY SUPERVISION
4/30/2020
SIGNATURE — LICENSE EXPIRES

SYM	DESCRIPTION	DATE	APPR

SUBMITTAL PHASE: BID SET
SUBMITTAL DATE: 03/23/2020
DES GE | DRW GE | CHK JF

STATE OF HAWAII — FACILITY MANAGEMENT OFFICE
DEPARTMENT OF DEFENSE — DESIGN AND PROJECT MANAGEMENT BRANCH
HAWAII ARMY NATIONAL GUARD
KALAELOA OAHU
ARMY AVIATION SUPPORT FACILITY BUILDING 30
FRAMING DETAILS

SCALE: AS NOTED
STATE JOB NO. CA-1825-C
FEDERAL PROJECT NO. 15190024
SHEET 38 OF 57
S501

NOTE: PHOTOVOLTAIC STRUCTURE IS ADDITIVE. SEE ELECTRICAL FOR MODULES.

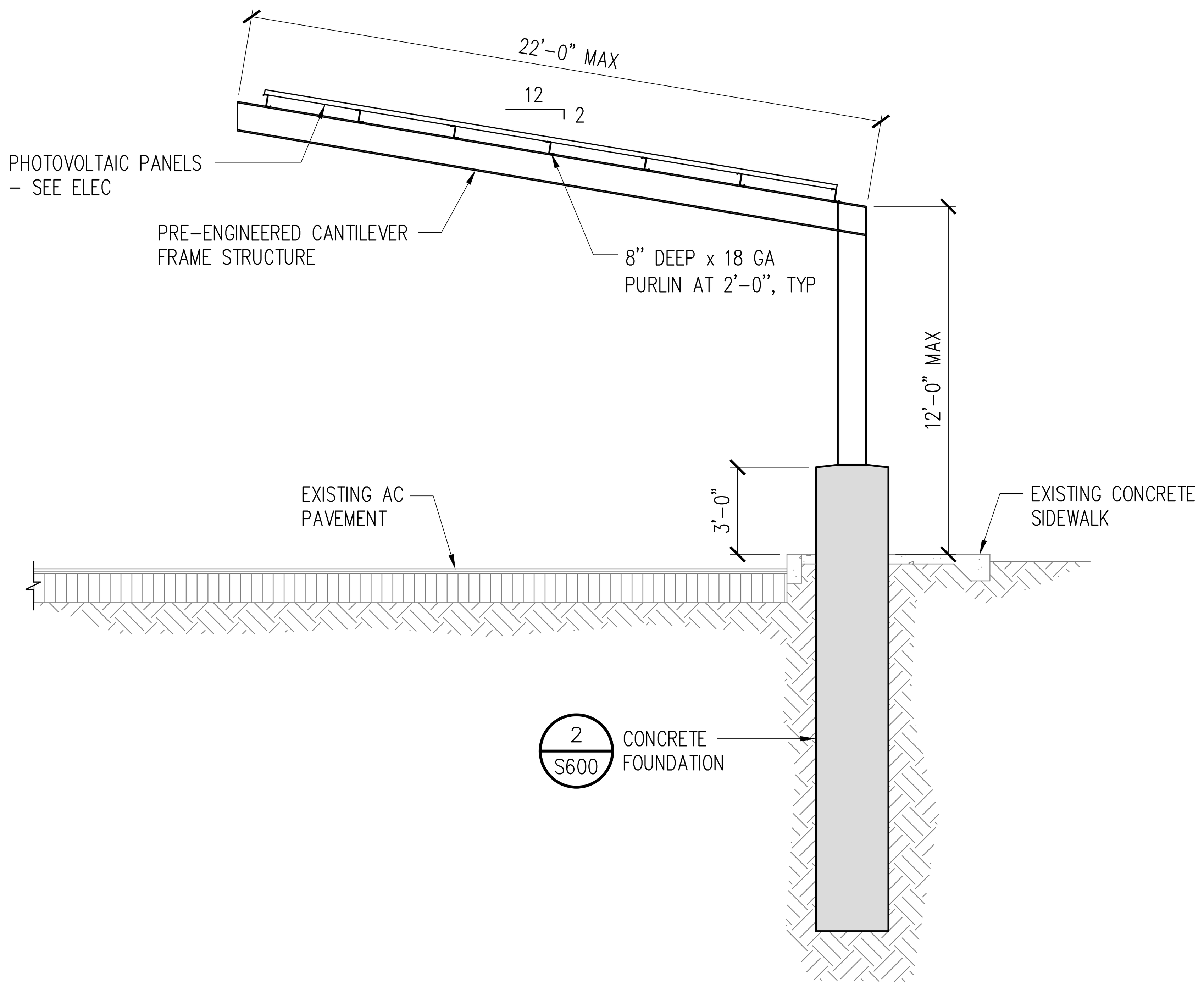

1 S600 **PHOTOVOLTAIC FRAME STUCTURE SECTION**

SCALE: 1/4" = 1'-0"

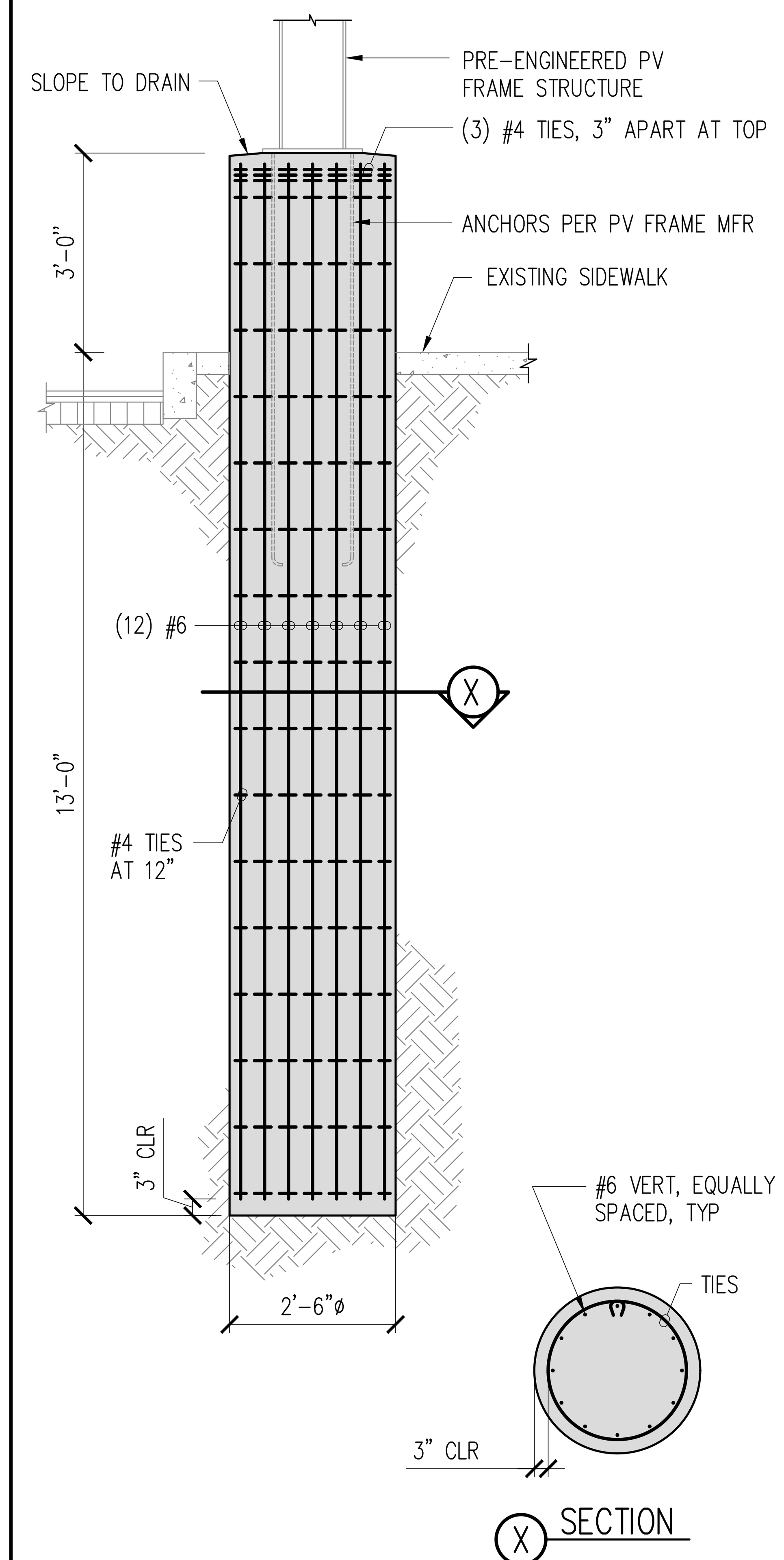

2 S600 **PV FOUNDATION DETAIL**

SCALE: 1/2" = 1'-0"

KAI HAWAII STRUCTURAL & FORENSIC ENGINEERS
50 S. Beretania Street, #C-119C
Honolulu, HI 96813
Phone: (808)533-2210

JERRY S FUJITA
LICENSED PROFESSIONAL ENGINEER
No. 11573-S
HAWAII, U.S.A.
THIS WORK WAS PREPARED BY ME OR UNDER MY SUPERVISION AND CONSTRUCTION OF THIS PROJECT WILL BE UNDER MY OBSERVATION.
SIGNATURE
4/30/2020 LICENSE EXPIRES

SYM	DESCRIPTION	DATE	APPR

SUBMITTAL PHASE: BID SET

SUBMITTAL DATE: 03/23/2020

DES GE | DRW GE | CHK JF

STATE OF HAWAII — FACILITY MANAGEMENT OFFICE

DEPARTMENT OF DEFENSE — DESIGN AND PROJECT MANAGEMENT BRANCH

HAWAII ARMY NATIONAL GUARD

KALAELOA OAHU

ARMY AVIATION SUPPORT FACILITY BUILDING 30

PHOTOVOLTAIC FRAME SECTION AND DETAILS

SCALE: AS NOTED

STATE JOB NO. CA-1825-C

FEDERAL PROJECT NO. 15190024

SHEET 39 OF 57

S600

MECHANICAL LEGEND

SYMBOLS	ABBR.	DESCRIPTION
		EXISTING TO REMAIN
		NEW MECHANICAL WORK
	(E)	EXISTING
	(N)	NEW
FE	FE	FIRE EXTINGUISHER
CA	CA	COMPRESSED AIR
PW	PW	PRESSURIZED WATER
RW	RW	RINSE WATER
SS	SS	FOAMER SOAP SOLUTION
	CW	COLD WATER
	S OR W	SOIL OR WASTE, BELOW FLOOR
	S OR W	SOIL OR WASTE, ABOVE FLOOR
	V	VENT
OR	CO	CLEAN-OUT, WCO-WALL, FCO-FLOOR, COTG-GRADE
		CHECK VALVE
		FLEX CONNECTION
		BALL VALVE
		PRESSURE GAUGE
		SOLENOID VALVE
		STRAINER
		UNION
		PRESSURE RELIEF VALVE

FIRE SAFETY DURING ALTERATION NOTES

1. 16.4.3.1.1 A WATER SUPPLY FOR FIRE PROTECTION, EITHER TEMPORARY OR PERMANENT, SHALL BE MADE AVAILABLE AS SOON AS COMBUSTIBLE MATERIAL ACCUMULATES.
2. 16.4.4.1 WHERE THE BUILDING IS PROTECTED BY FIRE PROTECTION SYSTEMS, SUCH SYSTEMS SHALL BE MAINTAINED OPERATIONAL AT ALL TIMES DURING ALTERATION.
3. 16.4.4.2 WHERE ALTERATION REQUIRES MODIFICATION OF A PORTION OF THE FIRE PROTECTION SYSTEM, THE REMAINDER OF THE SYSTEM SHALL BE KEPT IN SERVICE AND THE FIRE DEPARTMENT SHALL BE NOTIFIED.
4. 16.4.4.3 WHEN IT IS NECESSARY TO SHUT DOWN THE SYSTEM, THE AHJ SHALL HAVE THE AUTHORITY TO REQUIRE ALTERNATE MEASURES OF PROTECTION UNTIL THE SYSTEM IS RETURNED TO SERVICE.
5. 16.4.4.4 THE FIRE DEPARTMENT SHALL BE NOTIFIED WHEN THE SYSTEM IS SHUT DOWN AND WHEN THE SYSTEM IS RETURNED TO SERVICE.
6. 10.8.1.1 AS NECESSARY DURING EMERGENCIES, MAINTENANCE, DRILLS, PRESCRIBED TESTING, ALTERATIONS, OR RENOVATIONS, PORTABLE OR FIXED FIRE-EXTINGUISHING SYSTEMS OR DEVICES OR ANY FIRE-WARNING SYSTEM SHALL BE PERMITTED TO BE MADE INOPERATIVE OR INACCESSIBLE. A FIRE WATCH SHALL BE REQUIRED AS SPECIFIED IN SECTIONS 13.3.4.3.5.2(3), 13.7.1.4.4, 16.5.4, 20.2.3.6, 34.6.3.3, 41.2.2.5, 41.2.2.6, 41.2.4, 41.3.4, 41.4.1, 34.5.4.3, AND 25.1.8 AT NO COST TO AHJ. NFPA 1 2012, AS AMENDED.
7. 13.1.9 WHEN A FIRE PROTECTION SYSTEM IS OUT OF SERVICE FOR MORE THAN 4 HOURS IN A 24-HOUR PERIOD, THE AHJ SHALL BE PERMITTED TO REQUIRE THE BUILDING TO BE EVACUATED OR AN APPROVED FIRE WATCH TO BE PROVIDED FOR ALL PORTIONS LEFT UNPROTECTED BY THE FIRE PROTECTION SYSTEM SHUTDOWN UNTIL THE FIRE PROTECTION SYSTEM HAS BEEN RETURNED TO SERVICE.

MECHANICAL EQUIPMENT SCHEDULE

SYMBOL	DESCRIPTION	REMARKS*
OWS 1	UNDERGROUND OIL/WATER SEPARATOR: FLOW RATE: 100 GPM RECOMMENDED OIL PUMP-OUT: 167 GALLONS HI-HI OIL LEVEL: 359 GALLONS EMERGENCY SPILL CAPACITY: 669 GALLONS INLET/OUTLET DIAMETER: 6-INCHES CYLINDRICAL UNDERGROUND DOUBLE WALL STEEL OIL/WATER SEPARATOR SHALL BE UL-S2215 LISTED FOR 10 PPM OIL AT DISCHARGE.	DESIGN BASED ON HIGHLAND TANK MODEL 1,000
WCPS 1	WATER CANNON PUMP SYSTEM: 4 EA. 5 HP MOTOR 10 GPM @ 175 PSI PER PUMP 460V/3ø/60Hz FOUR SKID-MOUNTED VERTICAL PUMPS, FURNISH WITH VOLTAGE PHASE PROTECTION.	DESIGN BASED ON EST MODEL EST410175WC
PW 1	PRESSURE WASHER: DISCHARGE FLOWRATE: 8.0 GPM PRESSURE: 2500 PSI MAX INLET PRESSURE: 65 PSI MOTOR: 15 HP, 480V/3ϕ/60Hz SHIPPING WEIGHT: 555 LB	DESIGN BASED ON EST MODEL E825CNE4XBSS
AC 1	AIR COMPRESSOR: ROTARY SCREW AIR COMPRESSOR 460V/3ϕ/60Hz, FLA: 18.7 TANK SIZE: 120 GALLONS COMPRESSOR MOTOR: 15 HP, 3,530 RPM FREE AIR AT MAX. PRESSURE: 52 CFM @ 125 PSI SOUND: 69dBA @ 3 FT.	DESIGN BASED ON INGERSOLL RAND MODEL UP6-15C-125/120-460-3
SSD 1	SOAP SOLUTION DISPENSER: 115V/1ϕ/60Hz, 15A COMPONENTS: 15 GALLON HOLDING TANK WITH FILL VALVE WATER INLET BALL VALVE WATER PRESSURE GAUGE & PRESSURE REGULATOR WATER FLOW RESTRICTOR PROPORTIONER MOUNTING BRACKET WATER-DRIVEN DOSING PUMP SOAP SOLUTION SOLENOID VALVE CW SUPPLY: 3/4"ϕ (UP TO 14 GPM)	DESIGN BASED ON EST PRE-ENGINEERED SYSTEM SIZED TO SUPPLY ONE 6-GPM FOAMER SYSTEM

PLUMBING FIXTURE SCHEDULE

SYMBOL	FIXTURE	TYPE	PIPE SIZE				GPM	REMARKS*
			W	V	CW	HW		
EES 1	COMBINATION EMERGENCY EYEWASH/SHOWER	STAINLESS STEEL	–	–	1-1/4"	–	30	DESIGN BASED ON HAWS 8300-8309
SS 1	SERVICE SINK	FLOOR-MOUNT WITH ADJUSTABLE TRAP	3"	2"	1/2"	–	2.5	DESIGN BASED ON KOHLER K-6716
FD 1	FLOOR DRAIN	CAST IRON WITH FLAT ROUND NICKEL BRONZE STRAINER	2"	2"	–	–	–	DESIGN BASED ON JAY R SMITH 2005Y(A)
HB 1	HOSE BIBB, INTERIOR	NON-REMOVABLE VACUUM BREAKER	–	–	1/2"	–	–	DESIGN BASED ON CHICAGO 998-RCF

*LISTED DESIGN "BASED ON" EQUIPMENT MANUFACTURERS/MODELS ARE NOT INTENDED TO LIMIT CHOICES OF MANUFACTURERS/MODELS (I.E., SUBJECT TO APPROVAL VIA SUBMITTALS/SUBSTITUTION REQUESTS, OTHER MANUFACTURERS/MODELS THAT MEET BIDDING REQUIREMENTS ARE ACCEPTABLE).

GENERAL NOTES

1. THE ENTIRE INSTALLATION SHALL COMPLY WITH ALL APPLICABLE REQUIREMENTS OF THE CITY AND COUNTY OF HONOLULU'S BUILDING CODE (IBC 2006), PLUMBING CODE (UPC 2006), ENERGY CODE (IECC 2015), FIRE CODE (NFPA 1 2012), ELECTRICAL CODE (NFPA 70 2014) AND ALL AGENCIES HAVING JURISDICTION.
2. DRAWINGS INDICATE THE GENERAL ARRANGEMENT AND SHALL BE FOLLOWED AS CLOSELY AS ACTUAL FIELD CONDITIONS PERMIT. REASONABLE MODIFICATIONS TO SUIT JOB CONDITIONS SHALL NOT CONSTITUTE A BASIS FOR ADDITIONAL COMPENSATION.
3. PROMPTLY NOTIFY AND COORDINATE WITH THE PROJECT MANAGER ANY DISCREPANCIES OR MAJOR DEVIATIONS FROM THE PLANS DUE TO UNFORESEEN OR VARYING FIELD CONDITIONS THAT PREVENT THE TERMS OF THE CONTRACT FROM BEING FULFILLED. COORDINATE THE WORK AMONG THE VARIOUS TRADES AS NECESSARY TO AVOID CONFLICTS AND TO ENSURE THE INSTALLATION OF WORK WITHIN THE AVAILABLE SPACE.
4. OBTAIN AND PAY FOR ALL APPLICABLE PERMITS, FEES, CERTIFICATES AND INSPECTIONS.
5. FIELD VERIFY ALL CONDITIONS AND DIMENSIONS RELATING TO THE PROJECT BEFORE ORDERING MATERIALS OR COMMENCING WITH THE REQUIRED WORK.
6. FURNISH AND INSTALL ALL MATERIALS AND EQUIPMENT INCLUDING CUTTING AND PATCHING AS REQUIRED FOR A COMPLETE AND OPERATING SYSTEM. ALL MATERIALS SHALL BE NEW, FREE FROM DEFECTS AND CONFORM TO CODE.
7. PATCH ALL SURFACES EXPOSED FROM CUTTING AND/OR REMOVAL WORK. PATCHING SHALL MATCH THE FINISH AND QUALITY OF ADJACENT SURFACES TO THE SATISFACTION OF THE CONTRACTING OFFICER.
8. THE WORD "REPLACE" MEANS REMOVE EXISTING WORK AND PROVIDE NEW WORK AS DETAILED OR NOTED ON THE DRAWINGS.
9. ALL WORK INDICATED SHALL BE NEW WORK UNLESS OTHERWISE INDICATED "EXISTING".
10. ALL ITEMS AND MATERIALS TO BE REMOVED SHALL BE DONE IN SUCH A MANNER AS TO PREVENT DAMAGE TO ITEMS AND MATERIALS TO REMAIN. ALL SUCH DAMAGES SHALL BE REPAIRED TO THE SATISFACTION OF THE PROJECT MANAGER.
11. ALL WASTE MATERIALS SHALL BE PROMPTLY REMOVED AND DISPOSED OF OUTSIDE THE LIMITS OF THE STATE'S PROPERTY.
12. PROVIDE TEMPORARY ACCESSIBLE ROUTES AROUND CONSTRUCTION IN ACCORDANCE WITH ADAAG 402.
13. VERIFY THE PRESENCE AND LOCATION OF ALL UNDERGROUND UTILITIES PRIOR TO CONSTRUCTION.
14. PAINT ALL EXPOSED MECHANICAL SUPPORTS TO MATCH EXISTING.

FIRE SAFETY NOTE

16.1.1 STRUCTURES UNDERGOING CONSTRUCTION, ALTERATION, OR DEMOLITION OPERATIONS, INCLUDING THOSE IN UNDERGROUND LOCATIONS, SHALL COMPLY WITH NFPA 241, STANDARD FOR SAFEGUARDING CONSTRUCTION, ALTERATION, AND DEMOLITION OPERATIONS, AND THIS CHAPTER. 2015 NFPA 1.

SEC. 18-5.2 RETENTION OF PLANS

ONE SET OF APPROVED PLANS, SPECIFICATIONS, AND COMPUTATIONS SHALL BE RETAINED BY THE BUILDING OFFICIAL FOR A PERIOD OF NOT LESS THAN 90 DAYS FROM DATE OF COMPLETION OF THE WORK COVERED THEREIN, AND ONE SET OF APPROVED PLANS SHALL BE RETURNED TO THE APPLICANT, AND SAID SET SHALL BE KEPT ON THE SITE OF THE BUILDING OR WORK AT ALL TIMES DURING WHICH THE WORK AUTHORIZED THEREBY IS IN PROGRESS. (SEC. 18-5.2 R.O. 1978 (1983 ED.); AM. ORD. 93-59)

CITY AND COUNTY OF HONOLULU
INTERNATIONAL ENERGY CONSERVATION CODE 2015

To the best of my knowledge, this project's design substantially conforms to the State of Hawaii Administrative Rules Chapter 3-181.1, "State Energy Conservation Code" (IECC 2015, as amended), for:

_____ Building Component Systems
_____ Electrical Component Systems
X Mechanical Component Systems

Signature: Andrew R. Petersen Date: 03/23/2020
Name: ANDREW R. PETERSEN
Title: PROJECT ENGINEER
License No.: 16815-M

HAWAII ARMY NATIONAL GUARD

Okahara and Associates Inc.
CONSULTING ENGINEERS

ANDREW R. PETERSEN
LICENSED PROFESSIONAL ENGINEER
No. 16815-M
HAWAII, U.S.A.

THIS WORK WAS PREPARED BY ME OR UNDER MY SUPERVISION AND CONSTITUTES OF THIS PROJECT WAS ON UNDER MY OBSERVATION.

Andrew R. Petersen 4/30/2020
SIGNATURE LICENSE EXPIRES

SYM	DESCRIPTION	DATE	APPR

SUBMITTAL PHASE: BID SET
SUBMITTAL DATE: 03/23/2020
DES KFC DRW KFC CHK ARP

DEPARTMENT OF DEFENSE
DESIGN AND PROJECT MANAGEMENT BRANCH
STATE OF HAWAII
FACILITY MANAGEMENT OFFICE
HAWAII ARMY NATIONAL GUARD
KALAELOA
OAHU
ARMY AVIATION SUPPORT FACILITY BUILDING 30
MECHANICAL LEGEND, SCHEDULES AND NOTES

SCALE: AS NOTED
STATE JOB NO. CA-1825-C
FEDERAL PROJECT NO. 15190024
SHEET 40 OF 57
M100

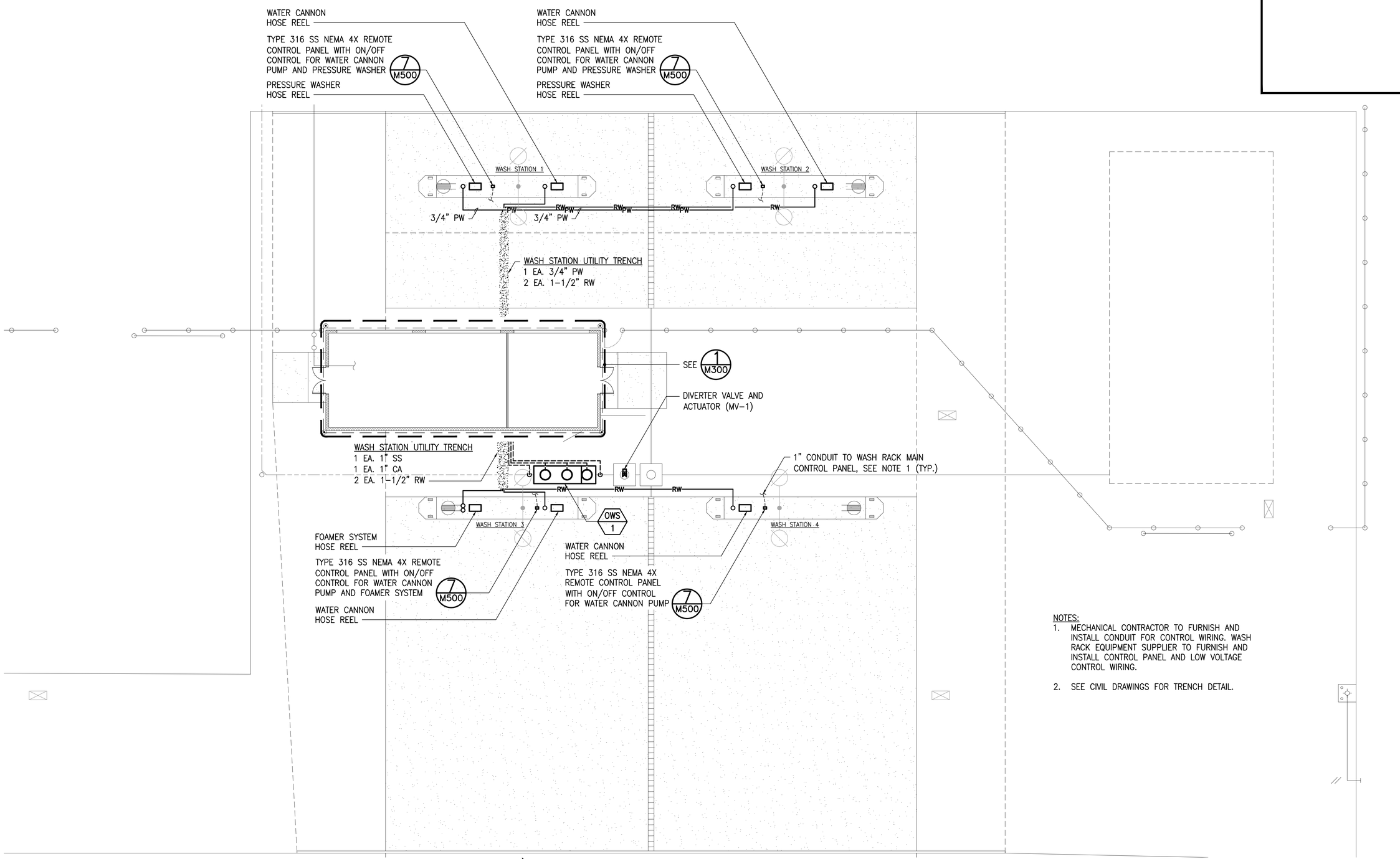

NOTES:

1. MECHANICAL CONTRACTOR TO FURNISH AND INSTALL CONDUIT FOR CONTROL WIRING. WASH RACK EQUIPMENT SUPPLIER TO FURNISH AND INSTALL CONTROL PANEL AND LOW VOLTAGE CONTROL WIRING.
2. SEE CIVIL DRAWINGS FOR TRENCH DETAIL.

1 M200 MECHANICAL SITE PLAN – BASE BID
SCALE: 3/32" = 1'-0"

HAWAII ARMY NATIONAL GUARD

Okahara and Associates Inc.
CONSULTING ENGINEERS

ANDREW R. PETERSEN
LICENSED PROFESSIONAL ENGINEER
No. 16815-M
HAWAII, U.S.A.

THIS WORK WAS PREPARED BY ME OR UNDER MY SUPERVISION AND CONSTRUCTION OF THIS PROJECT WAS OR UNDER MY OBSERVATION.

Andrew R. Petersen 4/30/2020
SIGNATURE LICENSE EXPIRES

STM	DESCRIPTION	DATE	APPR

SUBMITTAL PHASE: BID SET
SUBMITTAL DATE: 03/23/2020
DES KFC DRW KFC CHK ARP

STATE OF HAWAII
FACILITY MANAGEMENT OFFICE
DEPARTMENT OF DEFENSE
DESIGN AND PROJECT MANAGEMENT BRANCH
HAWAII ARMY NATIONAL GUARD
KALAELOA
OAHU
ARMY AVIATION SUPPORT FACILITY BUILDING 30
MECHANICAL SITE PLAN – BASE BID

SCALE: AS NOTED
STATE JOB NO. CA-1825-C
FEDERAL PROJECT NO. 15190024
SHEET 41 OF 57
M200

BID ALTERNATE KEYNOTES

5D	ALTERNATE NO. 5 DEDUCTIVE DELETE FOAMER SYSTEM INCLUSIVE OF SOAP SOLUTION DISPENSER SSD-1, FOAMER HOSE REEL, SOAP SOLUTION PIPING, COMPRESSED AIR PIPING FOR FOAMER HOSE REEL, AND RELATED CONTROLS, SUPPORTS AND APPURTENANCES.
7D	ALTERNATE NO. 7 DEDUCTIVE DELETE WASH STATION 1 AND 2 INCLUSIVE OF ASSOCIATED HOSE REELS, CONTROLS, TRENCHING, PIPING, SIGNAGE, PUMPS, SUPPORTS AND APPURTENANCES. RELOCATE ONE PRESSURE WASHER HOSE REEL TO WASH STATION 4 INCLUSIVE OF PW PIPING, REMOTE CONTROLS, SUPPORTS AND APPURTENANCES. REMOVE ONE CA STATION, PIPING AND APPURTENANCES.

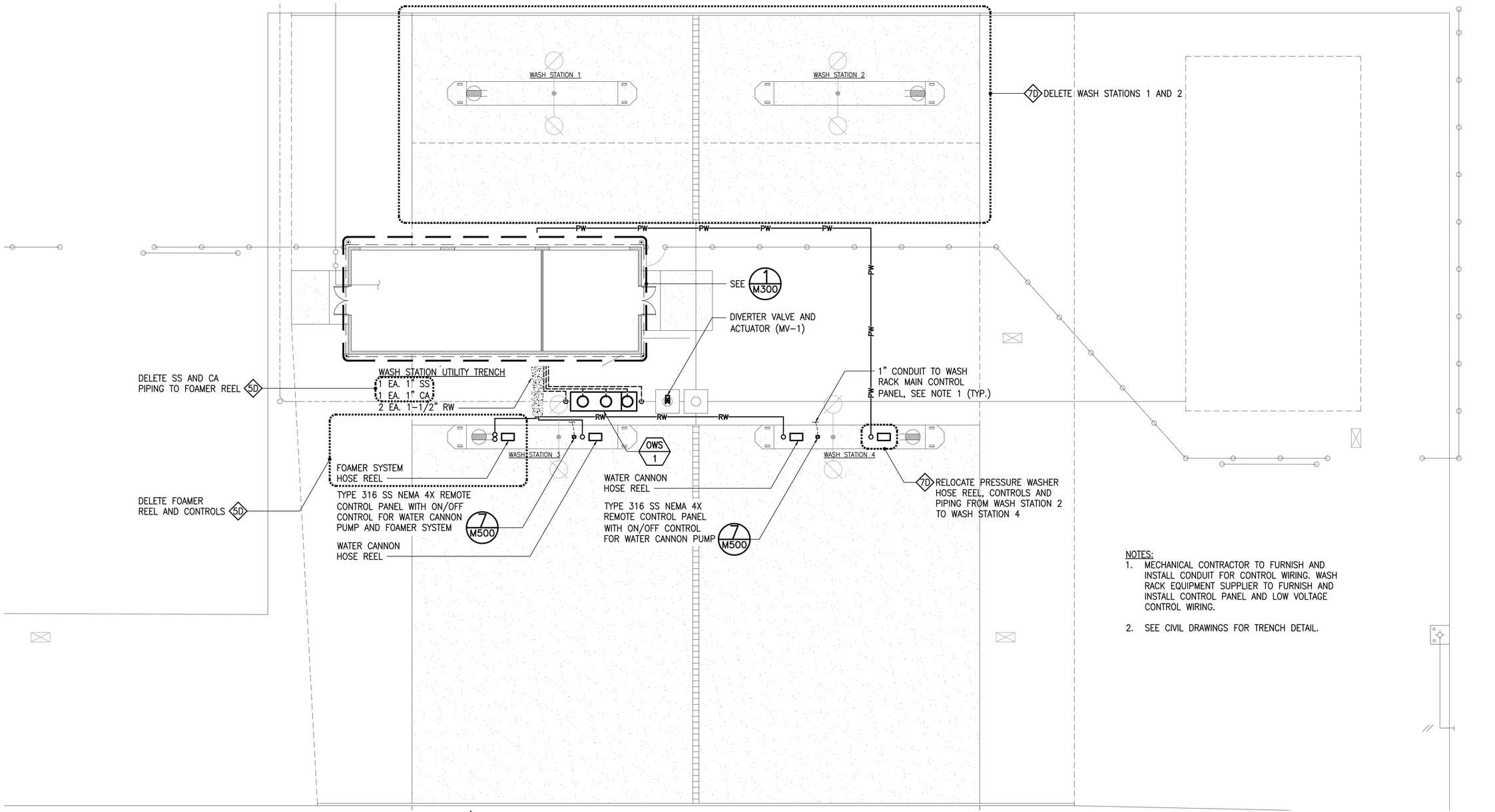

NOTES:
1. MECHANICAL CONTRACTOR TO FURNISH AND INSTALL CONDUIT FOR CONTROL WIRING. WASH RACK EQUIPMENT SUPPLIER TO FURNISH AND INSTALL CONTROL PANEL AND LOW VOLTAGE CONTROL WIRING.
2. SEE CIVIL DRAWINGS FOR TRENCH DETAIL.

1 M201 MECHANICAL SITE PLAN – ALTERNATE DEDUCTIVES
SCALE: 3/32" = 1'-0"

4' 0 8' 16' 24' 32'
SCALE: 3/32"=1'-0"

HAWAII ARMY NATIONAL GUARD

Okahara and Associates Inc.
CONSULTING ENGINEERS

ANDREW R. PETERSEN
LICENSED PROFESSIONAL ENGINEER
No. 16815-M
HAWAII, U.S.A.
THIS WORK WAS PREPARED BY ME OR UNDER MY SUPERVISION AND CONSTRUCTION OF THIS PROJECT WAS OBSERVED BY ME OR UNDER MY OBSERVATION.
SIGNATURE 4/30/2020 LICENSE EXPIRES

STM	DESCRIPTION	DATE	APPR

SUBMITTAL PHASE: BID SET
SUBMITTAL DATE: 03/23/2020
DES KFC DRW KFC CHK ARP

STATE OF HAWAII
FACILITY MANAGEMENT OFFICE
HAWAII ARMY NATIONAL GUARD
DEPARTMENT OF DEFENSE
DESIGN AND PROJECT MANAGEMENT BRANCH
KALAELOA
OAHU
ARMY AVIATION SUPPORT FACILITY BUILDING 30
MECHANICAL SITE PLAN – ALTERNATE DEDUCTIVES

SCALE: AS NOTED
STATE JOB NO. CA-1825-C
FEDERAL PROJECT NO. 15190024
SHEET 42 OF 57
M201

WASH RACK RULES

1. WASH RACK USE IS PROHIBITED DURING RAINFALL EVENTS.
2. DO NOT DISPOSE OF ANY CONTAMINANTS SUCH AS OILS, FUELS, SOLVENTS, PAINTS, OR HAZARDOUS LIQUIDS DIRECTLY INTO WASH RACK DRAINS.
3. WASH RACK IS INTENDED FOR WASHING ONLY. DO NOT PAINT, PAINT STRIP, MAINTAIN, OR CONDUCT ANY OTHER ACTIVITY OTHER THAN WASHING.
4. ONLY QUICK RELEASE NON-EMULSIFYING DETERGENTS ARE ALLOWED.
5. HOSE BIBBS AND ELECTRICAL RECEPTACLES ARE PROVIDED FOR YOUR CONVENIENCE.

1-1/2" HIGH BLACK LETTERS (TYP.) ARIAL FONT

3/4" HIGH BLACK LETTERS (TYP.) ARIAL FONT

3/4" PLYWOOD PAINTED WHITE ALL AROUND

2 / M300 WASH RACK RULES SIGN DETAIL
NOT TO SCALE

BID ALTERNATE KEYNOTES

5D	ALTERNATE NO. 5 DEDUCTIVE DELETE FOAMER SYSTEM INCLUSIVE OF SOAP SOLUTION DISPENSER SSD-1, FOAMER HOSE REEL, SOAP SOLUTION PIPING, COMPRESSED AIR PIPING FOR FOAMER HOSE REEL, AND RELATED CONTROLS, SUPPORTS AND APPURTENANCES.
7D	ALTERNATE NO. 7 DEDUCTIVE DELETE WASH STATION 1 AND 2 INCLUSIVE OF ASSOCIATED HOSE REELS, CONTROLS, TRENCHING, PIPING, SIGNAGE, PUMPS, SUPPORTS AND APPURTENANCES. RELOCATE ONE PRESSURE WASHER HOSE REEL TO WASH STATION 4 INCLUSIVE OF PW PIPING, REMOTE CONTROLS, SUPPORTS AND APPURTENANCES. REMOVE ONE CA STATION, PIPING AND APPURTENANCES.

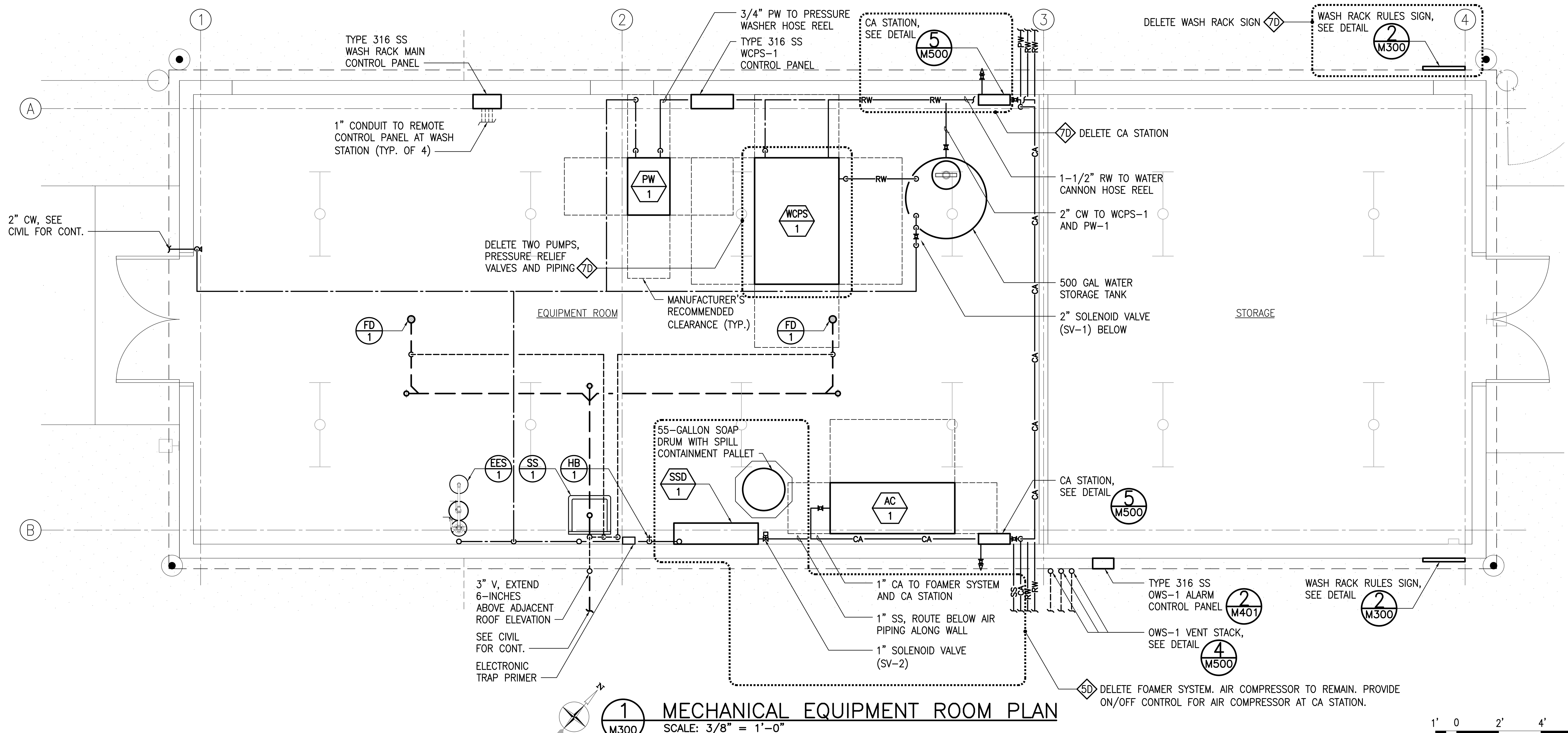

1 / M300 MECHANICAL EQUIPMENT ROOM PLAN
SCALE: 3/8" = 1'-0"

SCALE: 3/8"=1'-0"

Okahara and Associates Inc. CONSULTING ENGINEERS

ANDREW R. PETERSEN LICENSED PROFESSIONAL ENGINEER No. 16815-M HAWAII, U.S.A.

4/30/2020

SYM	DESCRIPTION	DATE	APPR

SUBMITTAL PHASE: BID SET
SUBMITTAL DATE: 03/23/2020
DES KFC | DRW KFC | CHK ARP

STATE OF HAWAII — FACILITY MANAGEMENT OFFICE
DEPARTMENT OF DEFENSE — DESIGN AND PROJECT MANAGEMENT BRANCH

HAWAII ARMY NATIONAL GUARD
KALAELOA OAHU

ARMY AVIATION SUPPORT FACILITY BUILDING 30

MECHANICAL EQUIPMENT ROOM PLAN AND WASH RACK RULES SIGN DETAIL

SCALE: AS NOTED
STATE JOB NO. CA-1825-C
FEDERAL PROJECT NO. 15190024
SHEET 43 OF 57
M300

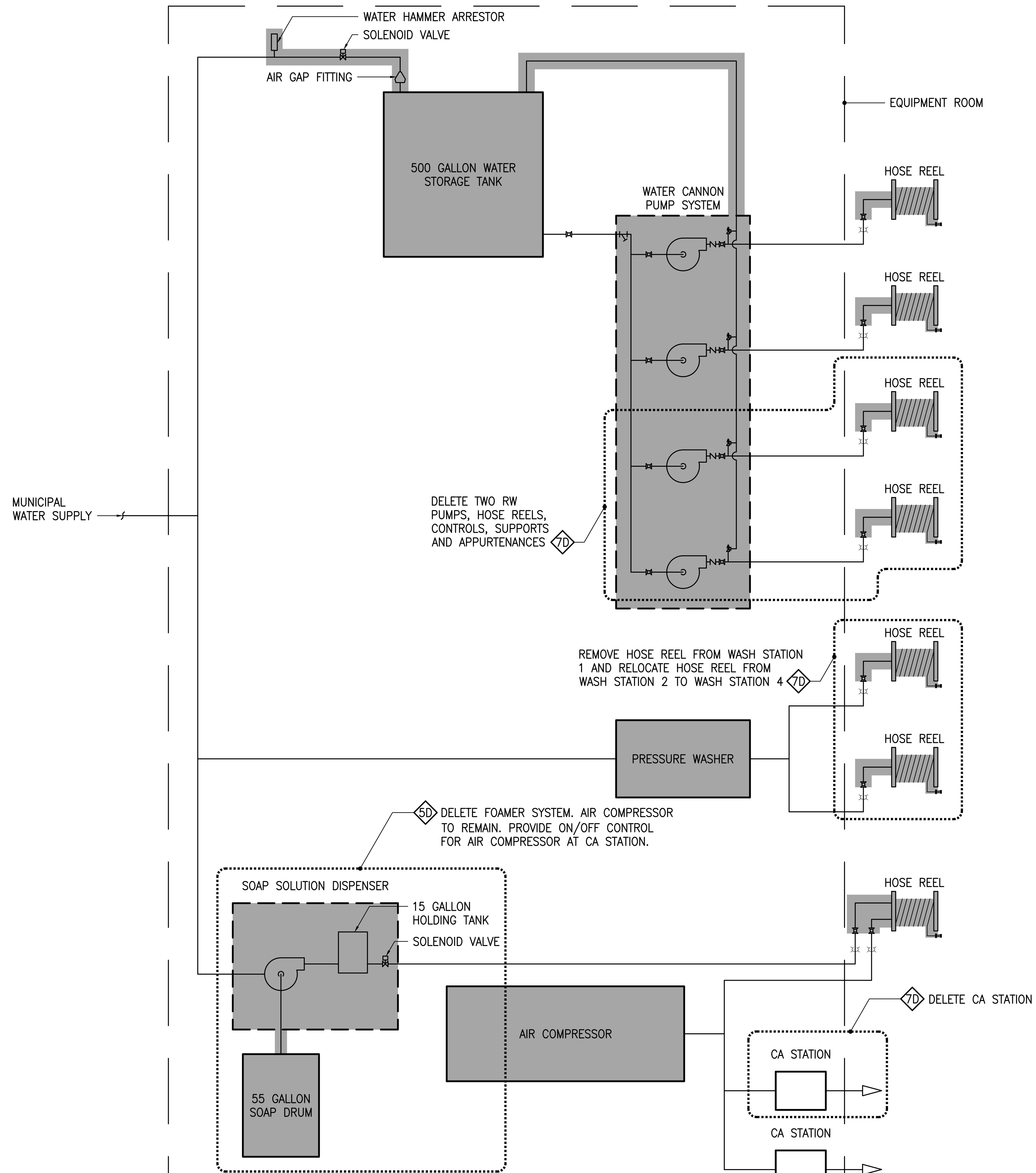

NOTES:
1. WASH RACK EQUIPMENT SUPPLIER TO FURNISH AND INSTALL ALL EQUIPMENT, MATERIALS, AND APPURTENANCES SHADED ▭ ABOVE. MECHANICAL CONTRACTOR TO FURNISH AND INSTALL ALL OTHER EQUIPMENT, MATERIALS, AND APPURTENANCES NECESSARY FOR A COMPLETE AND OPERATING SYSTEM UNLESS OTHERWISE NOTED.

1/M400 WASHRACK SCHEMATIC DIAGRAM

NOT TO SCALE

BID ALTERNATE KEYNOTES

5D	ALTERNATE NO. 5 DEDUCTIVE DELETE FOAMER SYSTEM INCLUSIVE OF SOAP SOLUTION DISPENSER SSD–1, FOAMER HOSE REEL, SOAP SOLUTION PIPING, COMPRESSED AIR PIPING FOR FOAMER HOSE REEL, AND RELATED CONTROLS, SUPPORTS AND APPURTENANCES.
7D	ALTERNATE NO. 7 DEDUCTIVE DELETE WASH STATION 1 AND 2 INCLUSIVE OF ASSOCIATED HOSE REELS, CONTROLS, TRENCHING, PIPING, SIGNAGE, PUMPS, SUPPORTS AND APPURTENANCES. RELOCATE ONE PRESSURE WASHER HOSE REEL TO WASH STATION 4 INCLUSIVE OF PW PIPING, REMOTE CONTROLS, SUPPORTS AND APPURTENANCES. REMOVE ONE CA STATION, PIPING AND APPURTENANCES.

WASH RACK SEQUENCE OF OPERATION

GENERAL
1. THE WASH RACK SYSTEM INCLUDES THE WATER STORAGE TANK, WATER CANNON PUMPS, PRESSURE WASHER, FOAMER SYSTEM INCLUDING AIR COMPRESSOR, COMPRESSED AIR STATIONS, HOSE REELS, DIVERTER VALVE AND CONTROLS.
2. WASH EQUIPMENT SHALL BE ACTIVATED MANUALLY VIA ON/OFF SELECTOR SWITCHES AT THE REMOTE CONTROL PANELS LOCATED AT EACH WASH BAY.
3. DURING WASH RACK OPERATION, THE WASH WATER WASTE FLOW SHALL BE DIVERTED THROUGH THE OIL WATER SEPARATOR.
4. WHEN THE WASH RACK IS NOT IN USE, THE DIVERTER VALVE SHALL CLOSE, AND FLOW SHALL BE DIVERTED TO THE STORM DRAIN.
5. REFER TO ON–SITE SIGNAGE FOR RULES AND RESTRICTIONS REGARDING WASH RACK OPERATIONS.

DIVERTER VALVE:
1. WHEN THE DIVERTER VALVE OPENS, WASH WATER SHALL FLOW TO THE OIL WATER SEPARATOR. WHEN THE DIVERTER VALVE CLOSES, RAINWATER SHALL FLOW TO THE STORM DRAIN SYSTEM.
2. WHEN THE FIRST EQUIPMENT ON/OFF SELECTOR SWITCH IS SWITCHED TO "ON" AT THE REMOTE CONTROL PANEL, THE DIVERTER VALVE SHALL OPEN. ONCE FULLY OPEN, A VALVE LIMIT SWITCH SHALL SIGNAL THE ASSOCIATED EQUIPMENT (WATER CANNON PUMP, PRESSURE WASHER OR FOAMER SOLENOID VALVE) TO SWITCH ON. IF THE VALVE LIMIT SWITCH CONTACT DOES NOT CLOSE AFTER AN ADJUSTABLE AMOUNT OF TIME (SET TO 30 SECONDS), A VISUAL ALARM SHALL BE DISPLAYED AT ALL OF THE REMOTE CONTROL PANELS. ALARM SHALL REMAIN ON UNTIL THE ISSUE IS RESOLVED AND THE SYSTEM IS MANUALLY RESET.
3. WHEN ALL EQUIPMENT ON/OFF SELECTOR SWITCHES ARE SWITCHED TO "OFF" AT THE REMOTE CONTROL PANELS, THE DIVERTER VALVE SHALL CLOSE AFTER AN ADJUSTABLE AMOUNT OF TIME (SET TO 90 SECONDS).

WATER CANNON PUMPS:
1. WHEN THE "WATER CANNON" ON/OFF SELECTOR SWITCH AT A REMOTE CONTROL PANEL IS SWITCHED TO ON AND THE DIVERTER VALVE IS FULLY OPEN, THE ASSOCIATED PUMP SHALL START.
2. WHEN THE "WATER CANNON" ON/OFF SELECTOR SWITCH AT A REMOTE CONTROL PANEL IS SWITCHED TO OFF, THE ASSOCIATED PUMP SHALL STOP.
3. WHEN THE WATER LEVEL IN THE MAKEUP WATER TANK DROPS TO THE LOW FLOAT LEVEL, THE PUMPS SHALL STOP AND AN ALARM SHALL BE INDICATED ON THE MAIN CONTROL PANEL.

PRESSURE WASHER:
1. WHEN THE "PRESSURE WASHER" ON/OFF SELECTOR SWITCH AT A REMOTE CONTROL PANEL IS SWITCHED TO ON AND THE DIVERTER VALVE IS FULLY OPEN, THE PRESSURE WASHER SHALL START.
2. WHEN BOTH "PRESSURE WASHER" ON/OFF SELECTOR SWITCHES AT THE REMOTE CONTROL PANELS ARE SWITCHED TO OFF, THE PRESSURE WASHER SHALL STOP.

FOAMER SYSTEM:
1. WHEN THE "FOAMER" ON/OFF SELECTOR SWITCH AT THE REMOTE CONTROL PANEL IS SWITCHED TO ON AND THE DIVERTER VALVE IS FULLY OPEN, THE AIR COMPRESSOR SHALL START AND THE SOAP SOLUTION SOLENOID VALVE SHALL OPEN.
2. WHEN THE "FOAMER" ON/OFF SELECTOR SWITCH AT THE REMOTE CONTROL PANEL IS SWITCHED TO OFF, THE AIR COMPRESSOR SHALL STOP AND THE SOAP SOLUTION SOLENOID VALVE SHALL CLOSE.

MAKE–UP WATER:
1. THE MAKEUP WATER SYSTEM SHALL CONSIST OF A SOLENOID VALVE ON THE INCOMING WATER LINE AND THREE FLOATS INSIDE THE 500 GALLON STORAGE TANK.
2. WHEN THE WATER LEVEL IN THE TANK INCREASES TO THE HIGH FLOAT SWITCH LEVEL, THE SOLENOID VALVE SHALL CLOSE PREVENTING FURTHER WATER FROM ENTERING THE TANK.
3. WHEN THE WATER LEVEL IN THE TANK DROPS BELOW THE LEVEL OF THE MIDDLE FLOAT, THE SOLENOID VALVE SHALL OPEN, ALLOWING WATER TO FLOW INTO THE TANK VIA AN AIRGAP FITTING.
4. WHEN THE WATER LEVEL IN THE TANK DROPS BELOW THE LOW FLOAT LEVEL, THE WATER CANNON SYSTEM SHALL STOP. AN ALARM SHALL BE DISPLAYED AT THE MAIN PUMP CONTROL PANEL AND THE REMOTE WATER CANNON CONTROL PANELS.

AIR COMPRESSOR STATIONS:
1. THE AIR COMPRESSOR SHALL START WHEN A PUSH BUTTON IS ACTIVATED AT THE COMPRESSED AIR STATION.
2. THE AIR COMPRESSOR SHALL STOP AFTER AN ADJUSTABLE AMOUNT OF TIME (SET TO 90 SECONDS).

Okahara and Associates Inc.
CONSULTING ENGINEERS

ANDREW R. PETERSEN
LICENSED PROFESSIONAL ENGINEER
No. 16815–M
HAWAII, U.S.A.
4/30/2020

SUBMITTAL PHASE: BID SET
SUBMITTAL DATE: 03/23/2020
DES: KFC DRW: KFC CHK: ARP

DEPARTMENT OF DEFENSE
DESIGN AND PROJECT MANAGEMENT BRANCH
STATE OF HAWAII
FACILITY MANAGEMENT OFFICE

HAWAII ARMY NATIONAL GUARD
KALAELOA OAHU

ARMY AVIATION SUPPORT FACILITY BUILDING 30

WASH RACK SCHEMATIC DIAGRAM AND SEQUENCE OF OPERATION

SCALE: AS NOTED
STATE JOB NO. CA–1825–C
FEDERAL PROJECT NO. 15190024
SHEET 44 OF 57

M400

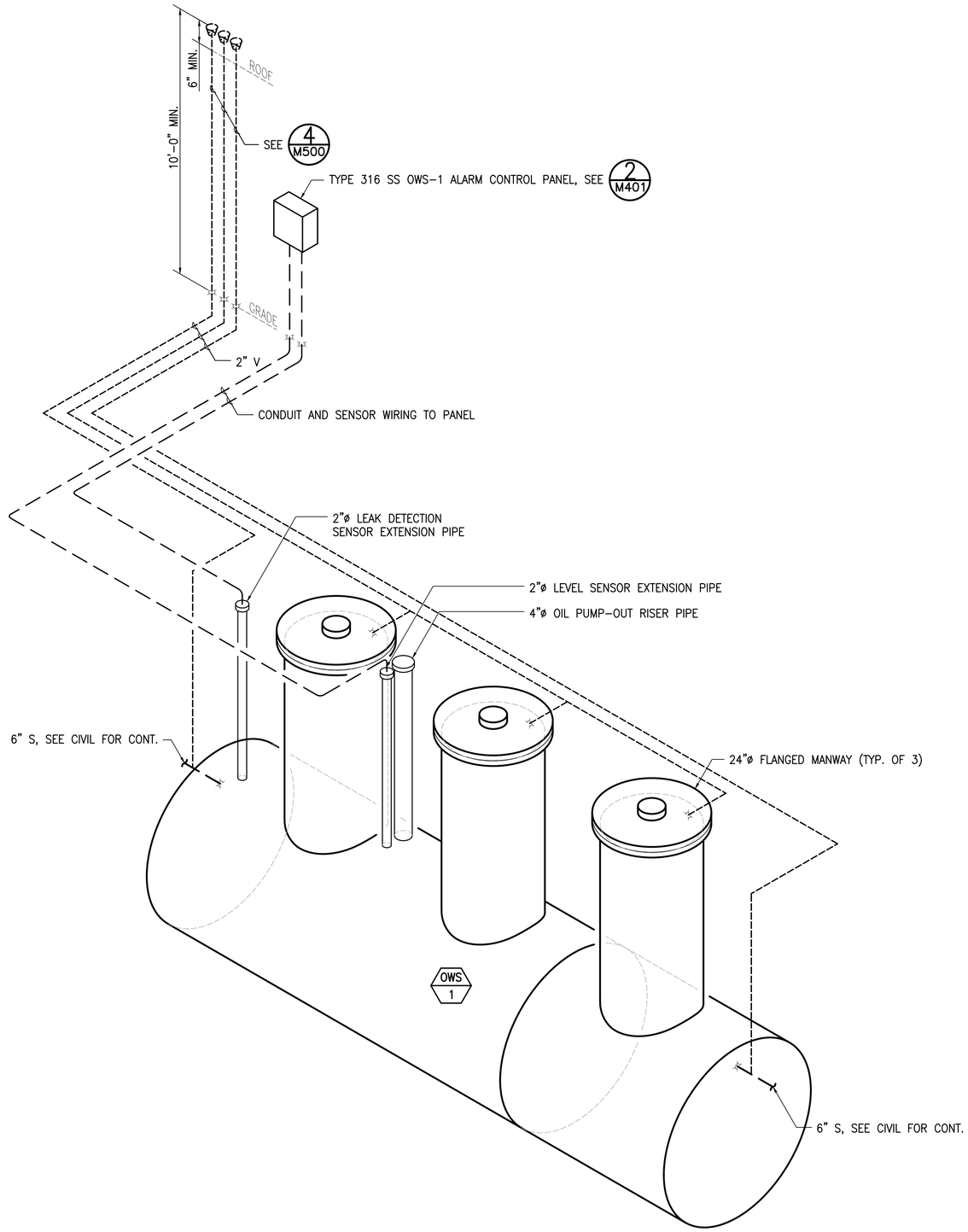

1 M401 OIL WATER SEPARATOR PIPING DIAGRAM
NOT TO SCALE

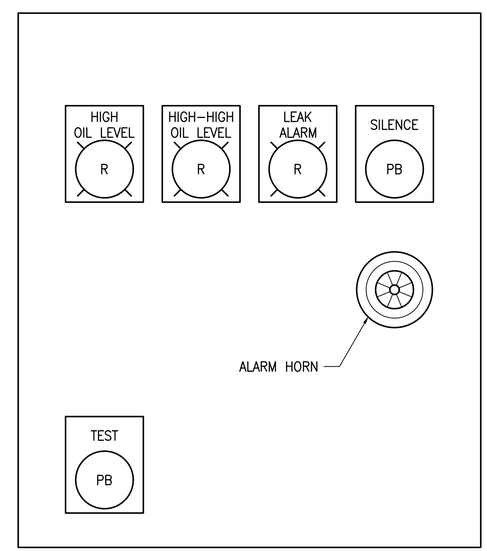

TYPE 316 SS NEMA 4X ENCLOSURE

LEGEND

R — RED PILOT LIGHT – PUSH TO TEST TYPE

PB — PUSH BUTTON

2 M401 OWS-1 ALARM CONTROL PANEL ELEVATION
NOT TO SCALE

Okahara and Associates Inc.
CONSULTING ENGINEERS

ANDREW R. PETERSEN
LICENSED PROFESSIONAL ENGINEER
No. 16815-M
HAWAII, U.S.A.

THIS WORK WAS PREPARED BY ME OR UNDER MY SUPERVISION AND CONSTRUCTION OF THIS PROJECT WAS UNDER MY OBSERVATION.

Andrew R. Petersen 4/30/2020
SIGNATURE LICENSE EXPIRES

SYM	DESCRIPTION	DATE	APPR

SUBMITTAL PHASE: BID SET

SUBMITTAL DATE: 03/23/2020

DES KFC DRW KFC CHK ARP

STATE OF HAWAII
FACILITY MANAGEMENT OFFICE

DEPARTMENT OF DEFENSE
DESIGN AND PROJECT MANAGEMENT BRANCH

HAWAII ARMY NATIONAL GUARD

KALAELOA
OAHU

ARMY AVIATION SUPPORT FACILITY BUILDING 30

OIL WATER SEPARATOR PIPING DIAGRAM AND CONTROL PANEL ELEVATION

SCALE: AS NOTED

STATE JOB NO. CA-1825-C

FEDERAL PROJECT NO. 15190024

SHEET 45 OF 57

M401

BID ALTERNATE KEYNOTES	
5D	ALTERNATE NO. 5 DEDUCTIVE DELETE FOAMER SYSTEM INCLUSIVE OF SOAP SOLUTION DISPENSER SSD-1, FOAMER HOSE REEL, SOAP SOLUTION PIPING, COMPRESSED AIR PIPING FOR FOAMER HOSE REEL, AND RELATED CONTROLS, SUPPORTS AND APPURTENANCES.
7D	ALTERNATE NO. 7 DEDUCTIVE DELETE WASH STATION 1 AND 2 INCLUSIVE OF ASSOCIATED HOSE REELS, CONTROLS, TRENCHING, PIPING, SIGNAGE, PUMPS, SUPPORTS AND APPURTENANCES. RELOCATE ONE PRESSURE WASHER HOSE REEL TO WASH STATION 4 INCLUSIVE OF PW PIPING, REMOTE CONTROLS, SUPPORTS AND APPURTENANCES. REMOVE ONE CA STATION, PIPING AND APPURTENANCES.

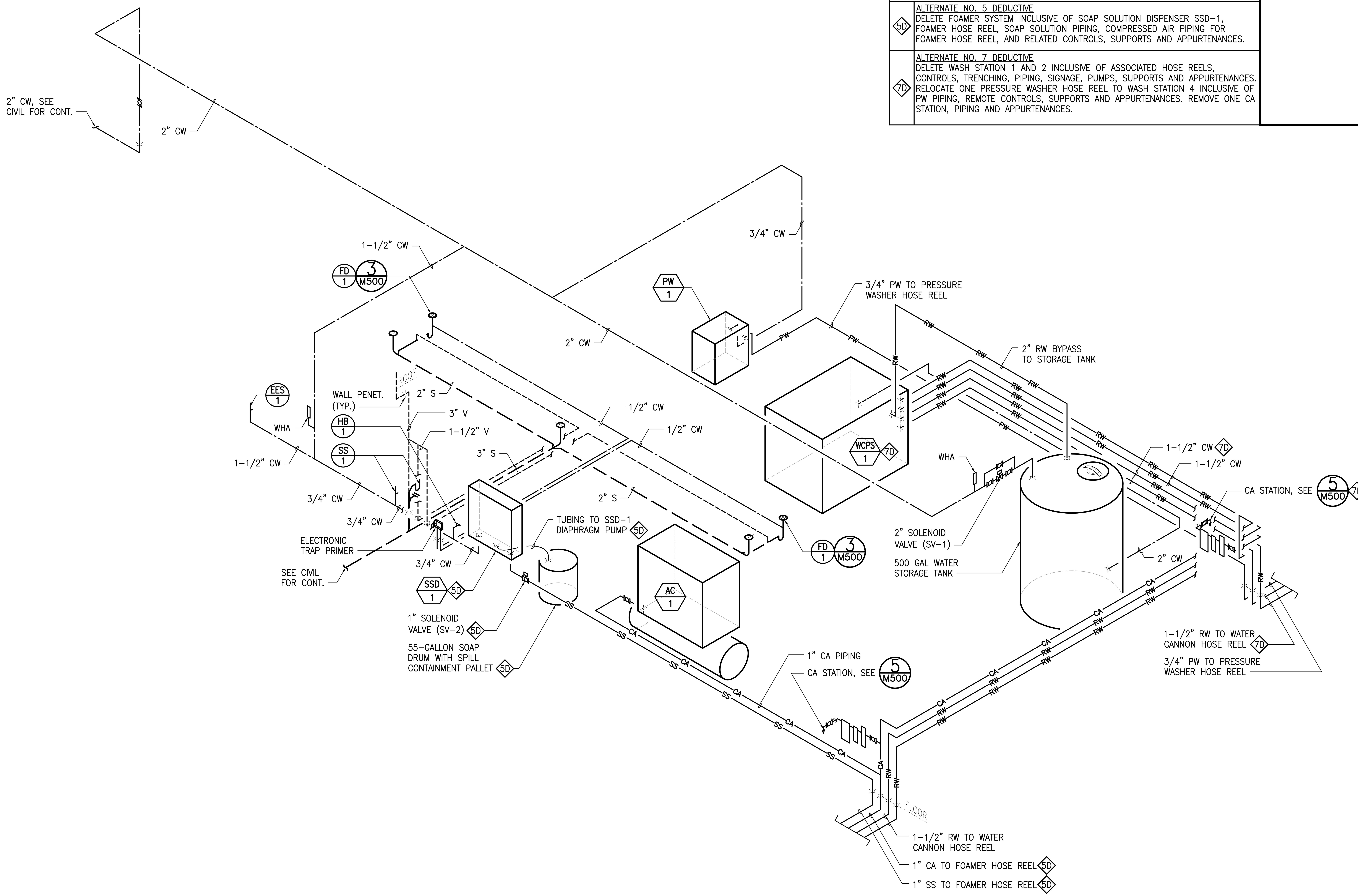

1 M402 EQUIPMENT ROOM PIPING DIAGRAM
NOT TO SCALE

HAWAII ARMY NATIONAL GUARD

Okahara and Associates Inc. CONSULTING ENGINEERS

ANDREW R. PETERSEN LICENSED PROFESSIONAL ENGINEER No. 16815-M HAWAII, U.S.A.

4/30/2020

SYM	DESCRIPTION	DATE	APPR

SUBMITTAL PHASE: BID SET

SUBMITTAL DATE: 03/23/2020

DES KFC | DRW KFC | CHK ARP

DEPARTMENT OF DEFENSE
DESIGN AND PROJECT MANAGEMENT BRANCH
STATE OF HAWAII
FACILITY MANAGEMENT OFFICE

HAWAII ARMY NATIONAL GUARD

KALAELOA OAHU

ARMY AVIATION SUPPORT FACILITY BUILDING 30

EQUIPMENT ROOM PIPING DIAGRAM

SCALE: AS NOTED

STATE JOB NO. CA-1825-C

FEDERAL PROJECT NO. 15190024

SHEET 46 OF 57

M402

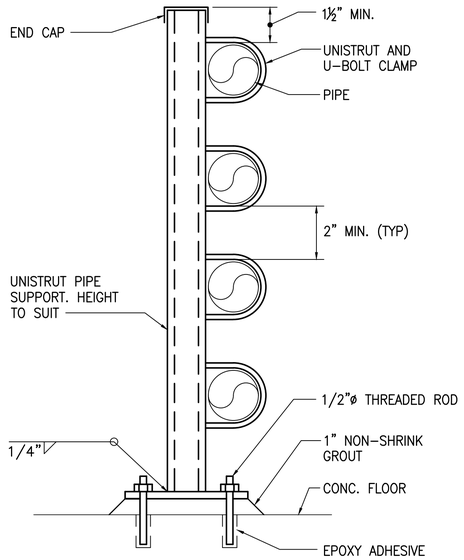

1 M500 FLOOR PIPE SUPPORT DETAIL
NOT TO SCALE

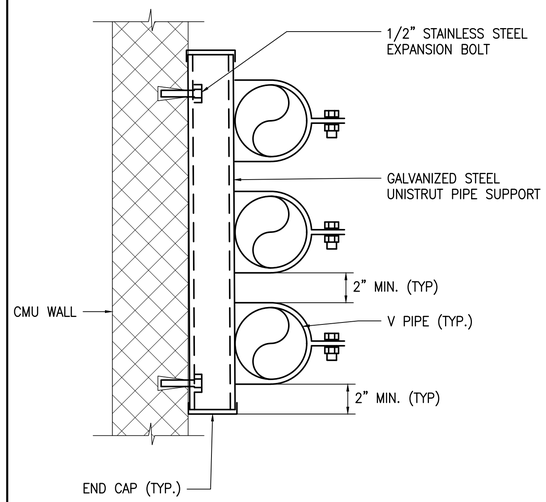

SECTION VIEW

2 M500 WALL PIPE SUPPORT DETAIL
NOT TO SCALE

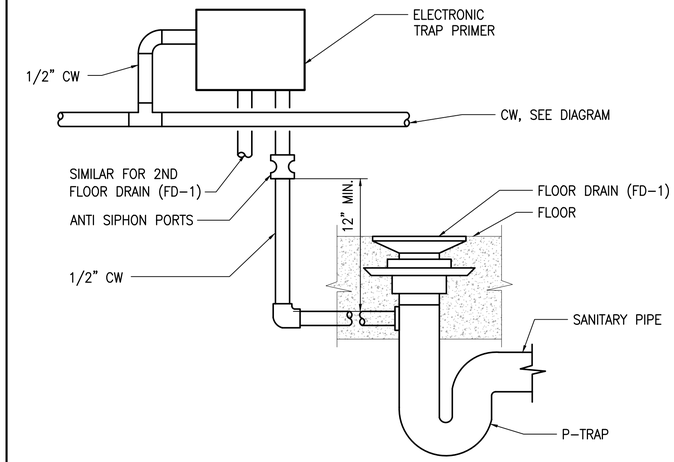

3 M500 TRAP PRIMER DETAIL
NOT TO SCALE

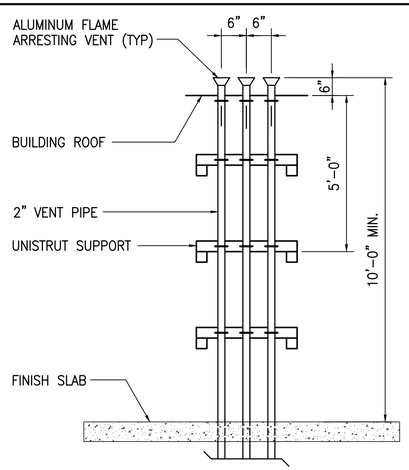

SECTION A

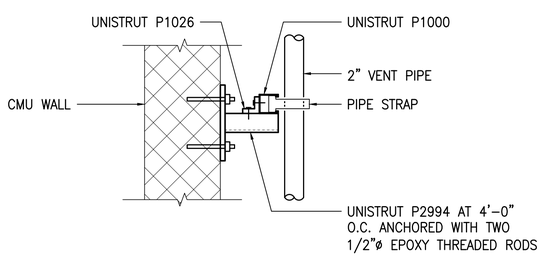

SECTION B

4 M500 OWS VENT WALL SUPPORT DETAIL
NOT TO SCALE

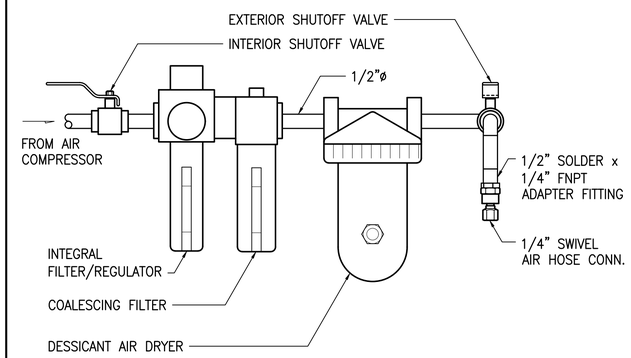

5 M500 COMPRESSED AIR STATION DETAIL
NOT TO SCALE

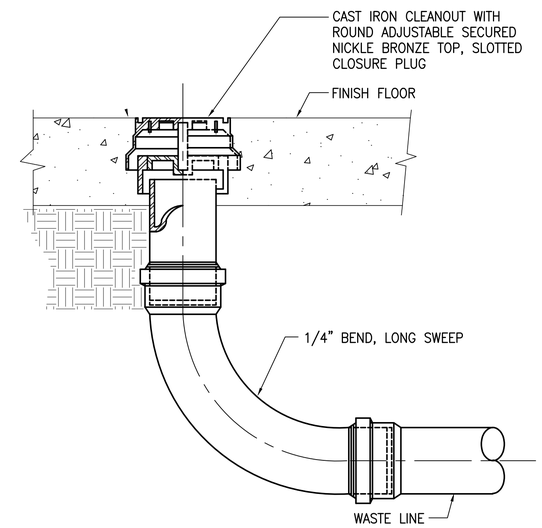

6 M500 FLOOR CLEANOUT DETAIL
NOT TO SCALE

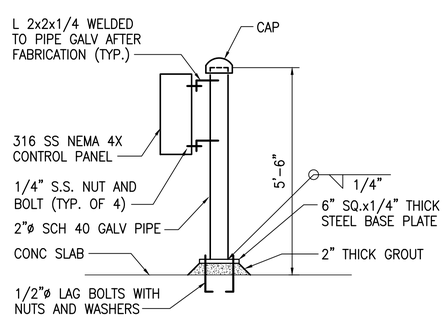

7 M500 CONTROL PANEL SUPPORT DETAIL
NOT TO SCALE

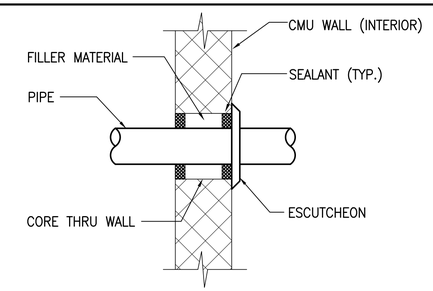

8 M500 PIPE THRU WALL DETAIL
NOT TO SCALE

Okahara and Associates Inc.
CONSULTING ENGINEERS

ANDREW R. PETERSEN
LICENSED PROFESSIONAL ENGINEER
No. 16815-M
HAWAII, U.S.A.

THIS WORK WAS PREPARED BY ME OR UNDER MY SUPERVISION AND CONSTRUCTION OF THIS PROJECT WAS OBSERVED BY ME OR UNDER MY OBSERVATION.

Andrew R. Petersen 4/30/2020
SIGNATURE LICENSE EXPIRES

SYM	DESCRIPTION	DATE	APPR

SUBMITTAL PHASE: BID SET
SUBMITTAL DATE: 03/23/2020
DES KFC | DRW KFC | CHK ARP

DEPARTMENT OF DEFENSE
DESIGN AND PROJECT MANAGEMENT BRANCH
STATE OF HAWAII
FACILITY MANAGEMENT OFFICE

HAWAII ARMY NATIONAL GUARD
KALAELOA OAHU
ARMY AVIATION SUPPORT FACILITY BUILDING 30
MECHANICAL DETAILS

SCALE: AS NOTED
STATE JOB NO. CA-1825-C
FEDERAL PROJECT NO. 15190024
SHEET 47 OF 57
M500

ELECTRICAL SYMBOLS

EXIST SYMBOL	NEW SYMBOL	DESCRIPTION
	A 1a	LED LIGHT FIXTURE, SURFACE MOUNTED. +10' AFF OR AS NOTED. FIXTURE TYPE "A" INDICATED. "1a" DENOTES CONNECTED TO CIRCUIT #1, CONTROLLED BY SWITCH "a". HATCHING INDICATES FIXTURE EQUIPPED WITH EMERGENCY BACKUP BATTERY.
		LED STRIP FIXTURE, SURFACE MTD.
		LED LIGHT FIXTURE, WALL MTD.
	P1-1	AREA LIGHT POLE. SEE SHEET E602 FOR DETAIL. TYPE "P1" INDICATED, CONNECTED TO CIRCUIT "1."
	$	1P20A LIGHT SWITCH, WALL MTD +48" OR AS NOTED
	$a	LIGHT SWITCH/OCCUPANCY SENSOR COMBINATION. 1P20A, WALL MTD +46" OR AS NOTED. SWITCH "a" INDICATED.
	OS a	OCCUPANCY SENSOR, CEILING MTD. ASSOCIATED WITH SWITCH "a" INDICATED.
	RC a	LIGHTING CONTROL ROOM CONTROLLER. ASSOCIATED WITH SWITCH "a" INDICATED.
		ELECTRICAL PANELBOARD
E	E	ELECTRICAL EQUIPMENT CONNECTION
J	J / J	JUNCTION BOX, 4"SQ MIN., WA//LCEILING MTD RESPECTIVELY
J / J	J / J	LARGE JUNCTION BOX, SIZE AS NOTED, WALL/CEILING MTD RESPECTIVELY
		DUPLEX RECEPTACLE, 20A, WALL MTD. +18" OR AS NOTED
		DUPLEX RECEPTACLE, 20A, GFI TYPE, WALL MTD. +18" OR AS NOTED
		SINGLE RECEPTACLE, 20A, WALL MTD. +18" OR AS NOTED
		SECONDARY POWER 2' X 4' HANDHOLE. PROVIDE 2X4 PRECAST CONCRETE PULLBOX PER HECO STD DWG NO. 30-2005. INSCRIBE COVER W/ "ELEC"
—e—		CONDUIT CONCEALED IN WALL, OR ABOVE CEILING, 3 WIRES AND 1 GROUND WIRE INDICATED. NO HASHMARKS DENOTES 2 WIRES
—e—		EXPOSED CONDUIT
—e—		CONDUIT CONCEALED IN SLAB OR BELOW GRADE
	—C—	LOW VOLTAGE LIGHTING CONTROL CONDUIT
	A 3E	ELECTRICAL/LIGHTING DUCTLINE & DESIGNATORS; INDICATES TYPE "A" DUCT SECTION WITH TYPE "3E" DUCT; SEE DUCT SECTIONS & SCHEDULE ON SHEET E001
	AFF	DENOTES "ABOVE FINISHED FLOOR"
	MTD	DENOTES "MOUNTED"
	TYP	DENOTES "TYPICAL"
	WP	DENOTES "WEATHERPROOF"

GENERAL NOTES

1. PLANS DO NOT INDICATE COMPLETE EXISTING ELECTRICAL CONDITIONS. VISIT JOBSITE TO BECOME FAMILIAR WITH ALL EXISTING CONDITIONS AND EXTENT OF DEMOLITION AND NEW WORK PRIOR TO THE START OF WORK.
2. REPORT ANY DISCREPANCIES AND/OR DIFFERENCES IN DRAWINGS, IN RESPECT TO EXISTING CONDITIONS, TO THE STATE.
3. RESOLVE ALL DISCREPANCIES AND QUESTIONS PRIOR TO THE START OF WORK. NO EXTRA PAYMENT SHALL BE ALLOWED ON ACCOUNT OF WORK MADE NECESSARY BY FAILURE TO VISIT THE SITE AND/OR FAILURE TO RESOLVE DISCREPANCIES AND QUESTIONS.
4. ALL POWER OUTAGES SHALL BE COORDINATED AND APPROVED BY THE STATE. OUTAGES SHALL BE SCHEDULED AND LIMITED PER THE STATE'S REQUIREMENTS.
5. BEFORE ANY ELECTRICAL WIRING IS CUT, VERIFY USAGE OF WIRING TO ENSURE THAT REQUIRED SERVICES ARE NOT DISCONTINUED.

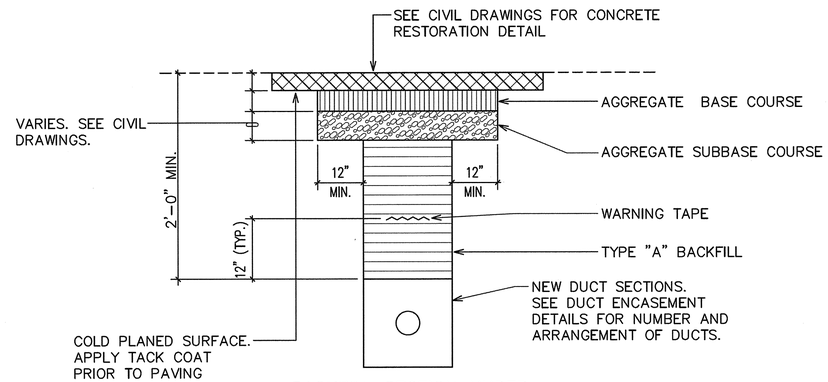

BACKFILL SECTION UNDER ROADWAY/PARKING LOT

BACKFILL NOTES:

TYPE "A" BACKFILL – EARTH & GRAVEL. ROCK SIZE TO BE 1" MAX. & THE MIXTURE TO CONTAIN NOT MORE THAN 50% BY VOLUME OF ROCK PARTICLES. 95% COMPACTION.

CONCRETE – 3" ENCASEMENT, 3000 psi COMPRESSIVE STRENGTH @ 28 DAYS.

1 / E001 TYPICAL DUCT SECTION DETAIL

NOT TO SCALE

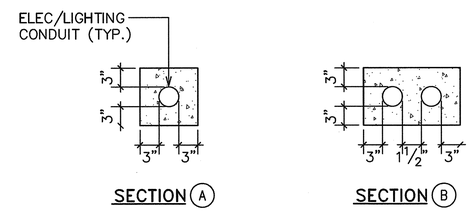

DUCT SECTION DETAILS

BUILDING ENERGY CONSERVATION CODE

EXTERIOR LIGHTING POWER ALLOWANCE 11,821W INSTALLED 3,774W

INTERIOR LIGHTING POWER ALLOWANCE 884W INSTALLED 384W

CALCULATIONS: SEPARATE X ON DRAWINGS ____
(CHECK ONE)

CITY AND COUNTY OF HONOLULU
2015 INTERNATIONAL ENERGY CONVERSATION CODE

To the best of my knowledge this project's design confirms to the International Energy Conservation Code (2015 IECC as amended) for electrical and lighting systems (Section C405 and C408)

COMPLIANCE METHOD
- ☒ 2015 IECC as amended. Mandatory & Prescriptive
- ☐ 2015 IECC as amended. Mandatory & Total Building Performance
- ☐ ASHRAE Standard 90.1-2013. Mandatory & Prescriptive
- ☐ ASHRAE Standard 90.1-2013. Mandatory & Energy Cost Budget

INFORMATION IN CONSTRUCTION DOCUMENTS	Yes	N/A
Interior Lighting		
Occupant sensor controls. C405.2.1	☒	☐
Time switch controls. C405.2.2	☒	☐
Daylight responsive controls. C405.2.3	☐	☒
Daylight zones on plans. C405.2.3.2 & C405.2.3.3	☐	☒
Guest room controls. C405.2.4	☐	☒
Interior lighting fixture schedule	☒	☐
Interior power for interior lighting fixtures. C405.4.1	☒	☐
Interior lighting fixture locations	☒	☐
Lighting control functional performance testing requirement. C408.3	☐	☒
Exterior Lighting		
Exterior lighting controls. C405.2.5	☒	☐
Exterior lighting fixture schedule	☒	☐
Input power for exterior lighting fixtures	☒	☐
Exterior lighting fixture locations	☒	☐
Electrical		
Electrical transformer efficiency. C405.7	☒	☐
Tenant submetering. C405.10	☐	☒

NOTES

SIGNATURE: [signature]

DATE: 03/19/2020

NAME: BILLY J. ORNELLAS

TITLE: PROJECT MANAGER

LICENSE NO.: 11658-E

HAWAII ARMY NATIONAL GUARD

Ronald N.S. Ho and Associates, Inc.

BILLY J. ORNELLAS
LICENSED PROFESSIONAL ENGINEER
No. 11658-E
HAWAII, U.S.A.

4/30/2022
SIGNATURE LICENSE EXPIRES

SYM	DESCRIPTION	DATE	APPR

SUBMITTAL PHASE: BID SET

SUBMITTAL DATE: 03/23/20

DES RY | DRW CAD | CHK BO

DEPARTMENT OF DEFENSE
DESIGN AND PROJECT MANAGEMENT OFFICE

STATE OF HAWAII
FACILITY MANAGEMENT OFFICE

HAWAII ARMY NATIONAL GUARD

KALAELOA
OAHU

ARMY AVIATION SUPPORT FACILITY BUILDING 30

SYMBOL LIST, GENERAL NOTES

SCALE: AS NOTED

STATE JOB NO. CA-1825-C

FEDERAL PROJECT NO. 15190024

SHEET 48 OF 57

E001

2020-03-19 10:53 AM Z:\ACAD\PROJECTS\219126\E001_219126_eSymbols

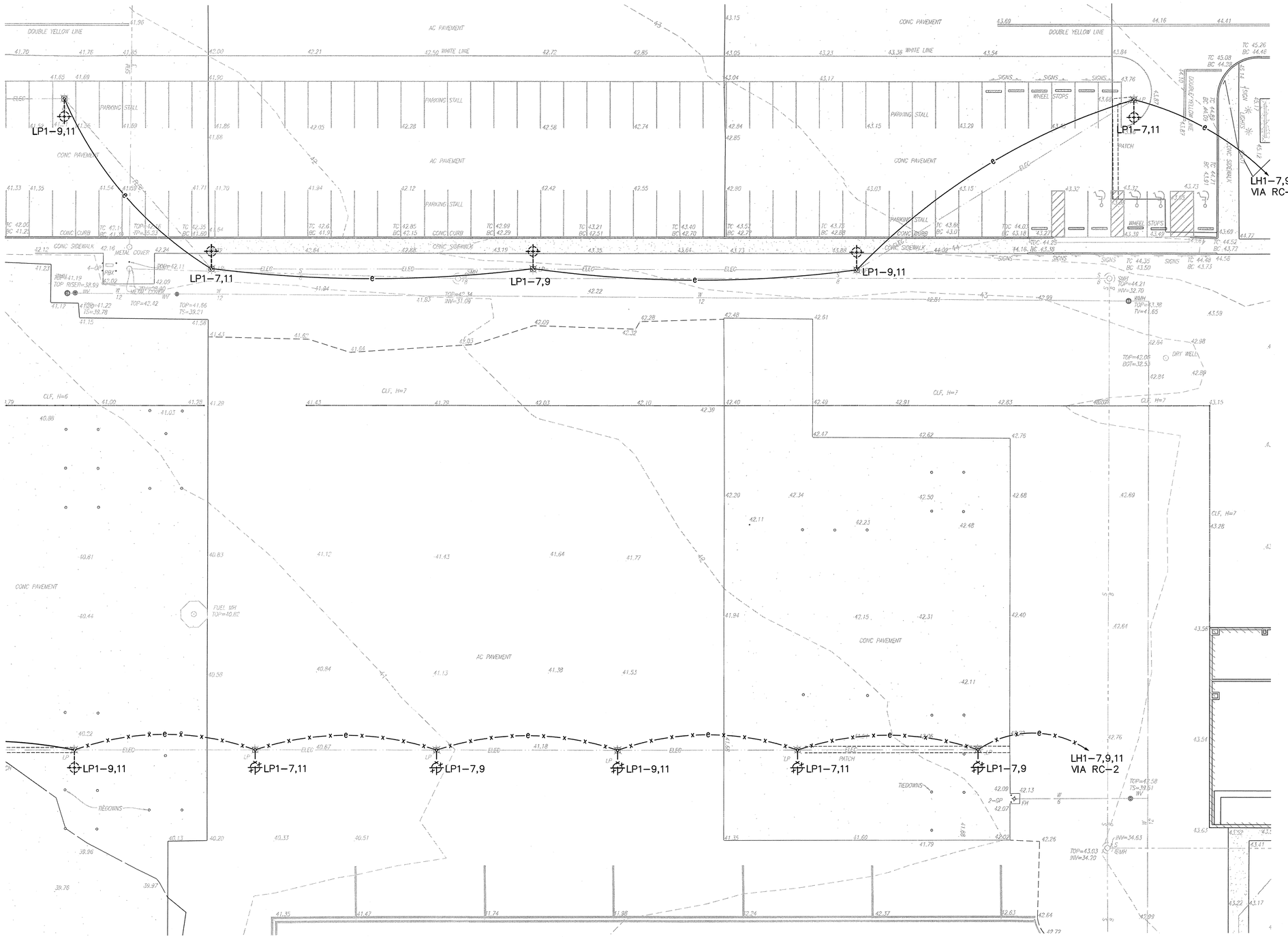

NORTH

DEMOLITION SITE LIGHTING PLAN

SCALE: 1"=20'

20' 10' 0 20' 40' 60'

SCALE: 1"=20'

GRAPHIC SCALE

HAWAII ARMY NATIONAL GUARD

Ronald N.S. Ho and Associates, Inc.

BILLY J. ORNELLAS
LICENSED PROFESSIONAL ENGINEER
No. 11658-E
HAWAII, U.S.A.

4/30/2022
SIGNATURE LICENSE EXPIRES

SYM	DESCRIPTION	DATE	APPR

SUBMITTAL PHASE: BID SET

SUBMITTAL DATE: 03/23/20

DES RY | DRW CAD | CHK BO

DEPARTMENT OF DEFENSE
DESIGN AND PROJECT MANAGEMENT BRANCH

HAWAII ARMY NATIONAL GUARD

STATE OF HAWAII
FACILITY MANAGEMENT OFFICE

KALAELOA
OAHU

ARMY AVIATION SUPPORT FACILITY BUILDING 30

DEMOLITION SITE LIGHTING PLAN

SCALE: AS NOTED

STATE JOB NO. CA–1825–C

FEDERAL PROJECT NO. 15190024

SHEET 49 OF 57

E101

2020-03-19 10:35 AM Z:\ACAD\PROJECTS\219126\E101_219126_Demo Site LightingPlan

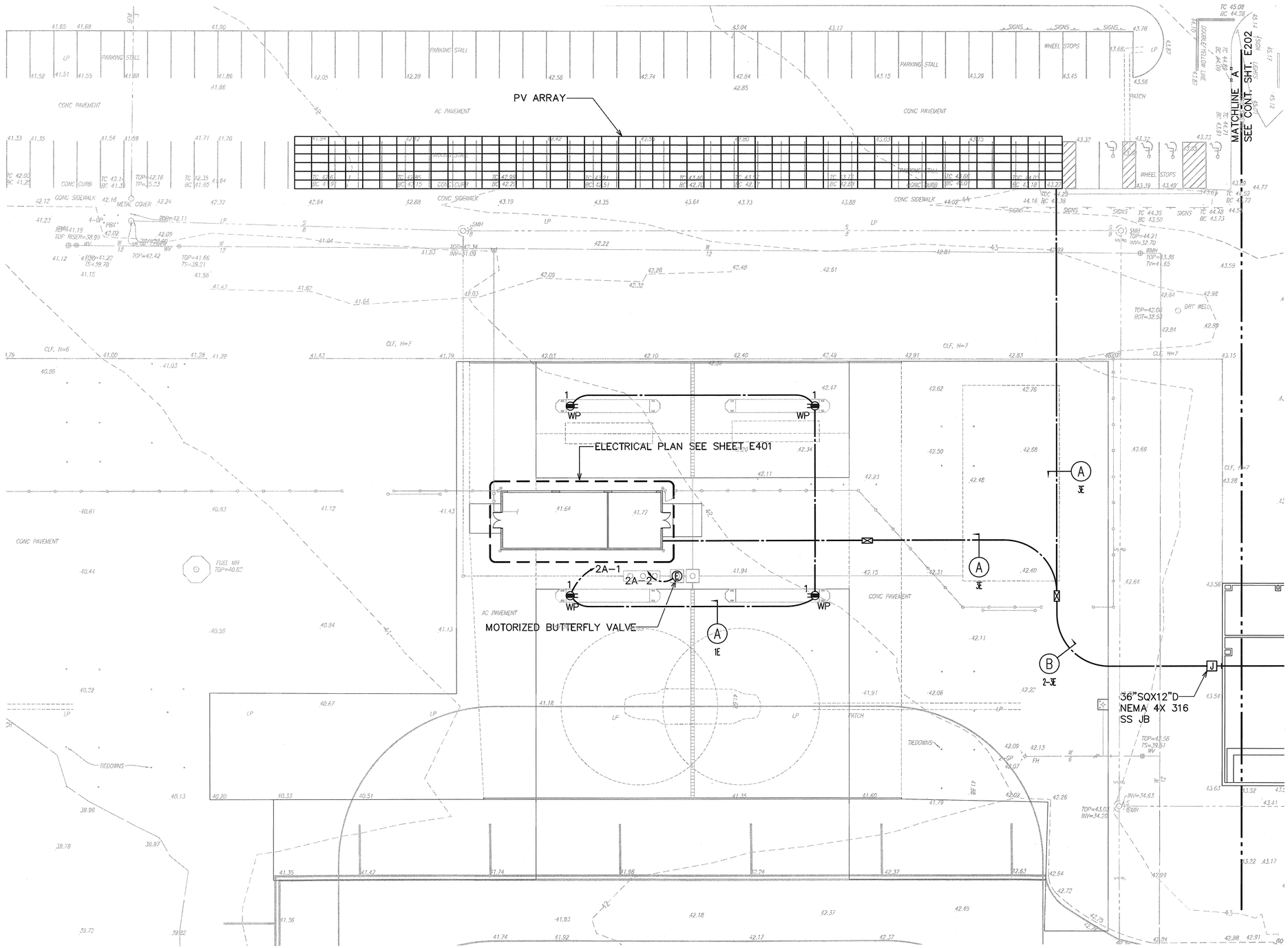

NORTH

ELECTRICAL SITE PLAN 1

SCALE: 1"=20'

20' 10' 0 20' 40' 60'

SCALE: 1"=20'

GRAPHIC SCALE

HAWAII ARMY NATIONAL GUARD

Ronald N.S. Ho and Associates, Inc.

BILLY J. ORNELLAS
LICENSED PROFESSIONAL ENGINEER
No. 11658-E
HAWAII, U.S.A.

4/30/2022
SIGNATURE LICENSE EXPIRES

SYM	DESCRIPTION	DATE	APPR

SUBMITTAL PHASE: BID SET

SUBMITTAL DATE: 03/23/20

DES RY | DRW CAD | CHK BO

STATE OF HAWAII
FACILITY MANAGEMENT OFFICE

DEPARTMENT OF DEFENSE
DESIGN AND PROJECT MANAGEMENT BRANCH

HAWAII ARMY NATIONAL GUARD

KALAELOA
OAHU

ARMY AVIATION
SUPPORT FACILITY BUILDING 30

ELECTRICAL SITE PLAN 1

SCALE: AS NOTED

STATE JOB NO. CA-1825-C

FEDERAL PROJECT NO. 15190024

SHEET 50 OF 57

E201

2020-03-19 10:38 AM Z:\KOAO\PROJECTS\219126\E201_219126_Site Plan 1

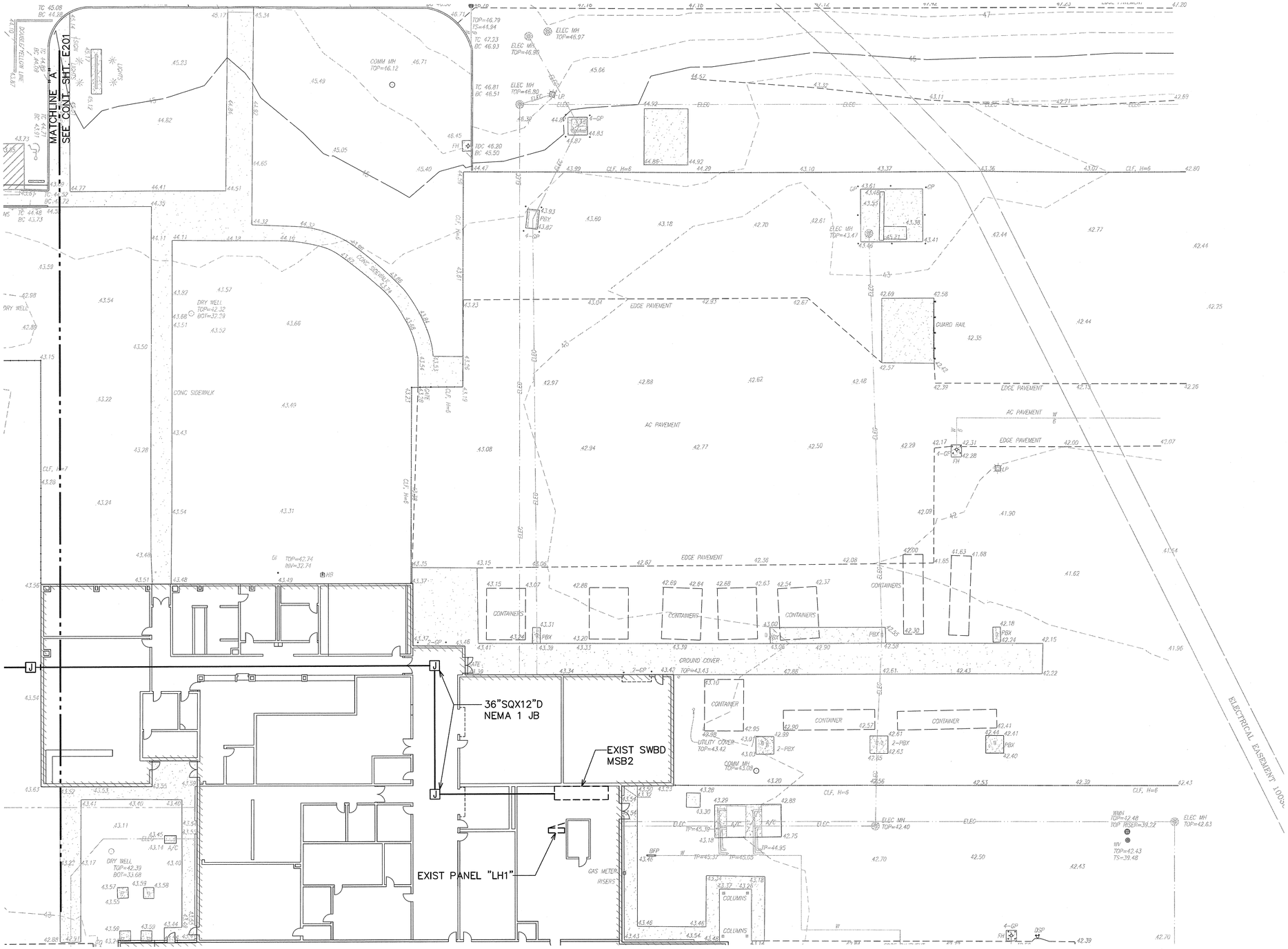

NORTH

ELECTRICAL SITE PLAN 2

SCALE: 1"=20'

20' 10' 0 20' 40' 60'

SCALE: 1"=20'

GRAPHIC SCALE

HAWAII ARMY NATIONAL GUARD

Ronald N.S. Ho and Associates, Inc.

BILLY J. ORNELLAS
LICENSED PROFESSIONAL ENGINEER
No. 11658-E
HAWAII, U.S.A.

4/30/2022
SIGNATURE LICENSE EXPIRES

SYM	DESCRIPTION	DATE	APPR

SUBMITTAL PHASE: BID SET

SUBMITTAL DATE: 03/23/20

DES RY | DRW CAD | CHK BO

DEPARTMENT OF DEFENSE
DESIGN AND PROJECT MANAGEMENT DIVISION

KALAELOA
OAHU

HAWAII ARMY NATIONAL GUARD

ARMY AVIATION SUPPORT FACILITY BUILDING 30

ELECTRICAL SITE PLAN 2

STATE OF HAWAII
FACILITY MANAGEMENT OFFICE

SCALE: AS NOTED

STATE JOB NO. CA-1825-C

FEDERAL PROJECT NO. 15190024

SHEET 51 OF 57

E202

2020-03-19 10:38 AM Z:\ACAD\PROJECTS\19125\E202_219125_Site Plan 2

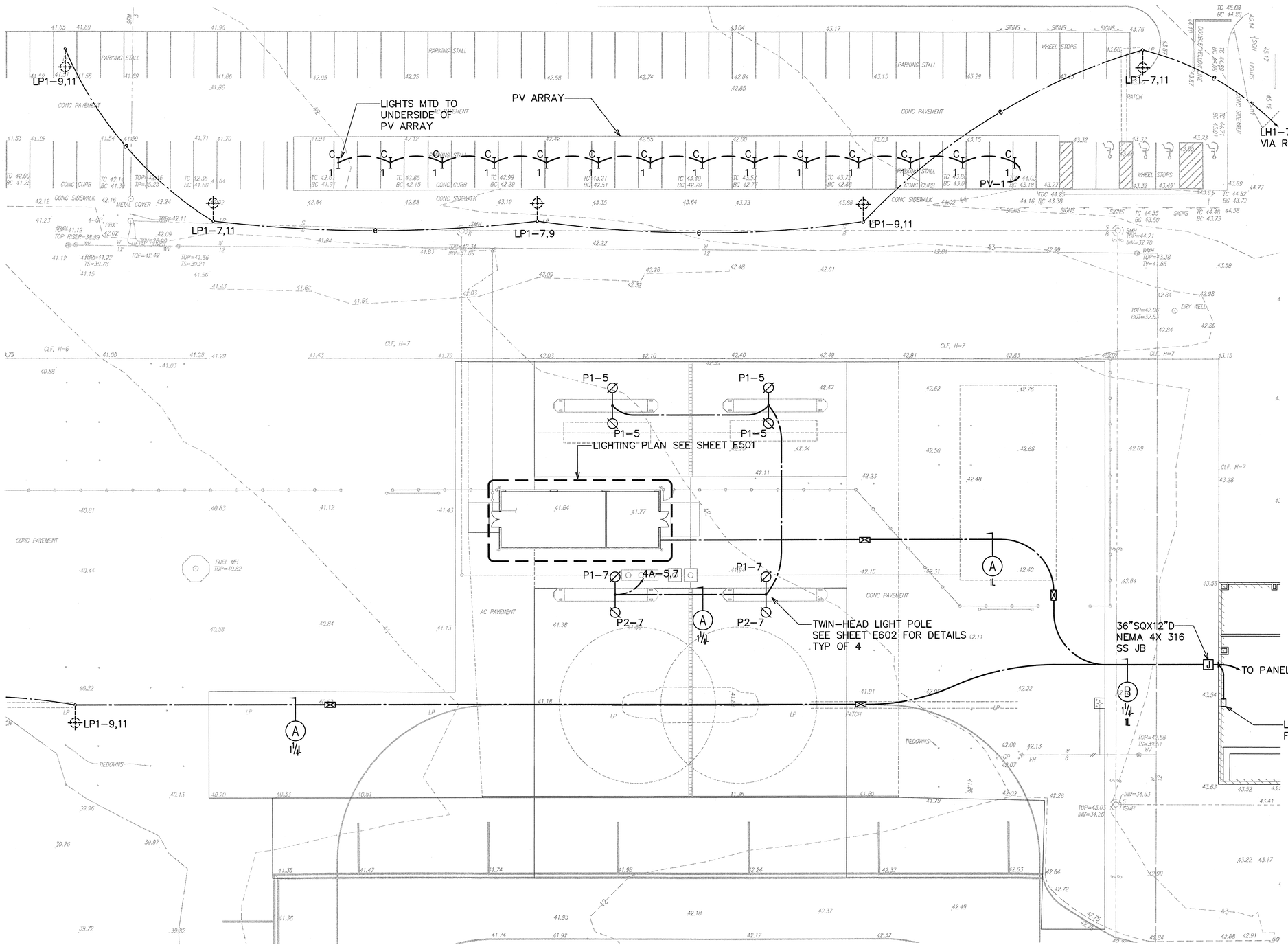

NORTH

NEW SITE LIGHTING PLAN

SCALE: 1"=20'

20' 10' 0 20' 40' 60'

SCALE: 1"=20'

GRAPHIC SCALE

Ronald N.S. Ho and Associates, Inc.

BILLY J. ORNELLAS
LICENSED PROFESSIONAL ENGINEER
No. 11658-E
HAWAII, U.S.A.

SIGNATURE 4/30/2022 LICENSE EXPIRES

SYM	DESCRIPTION	DATE	APPR

SUBMITTAL PHASE: BID SET

SUBMITTAL DATE: 03/23/20

DES RY | DRW CAD | CHK BO

STATE OF HAWAII
FACILITY MANAGEMENT OFFICE

DEPARTMENT OF DEFENSE
DESIGN AND PROJECT MANAGEMENT BRANCH

HAWAII ARMY NATIONAL GUARD

KALAELOA
OAHU

ARMY AVIATION SUPPORT FACILITY BUILDING 30

NEW SITE LIGHTING PLAN

SCALE: AS NOTED

STATE JOB NO. CA–1825–C

FEDERAL PROJECT NO. 15190024

SHEET 52 OF 57

E301

2020-03-19 10:36 AM Z:\ACAD\PROJECTS\21912B\E301_21912B_New Site Lighting Plan

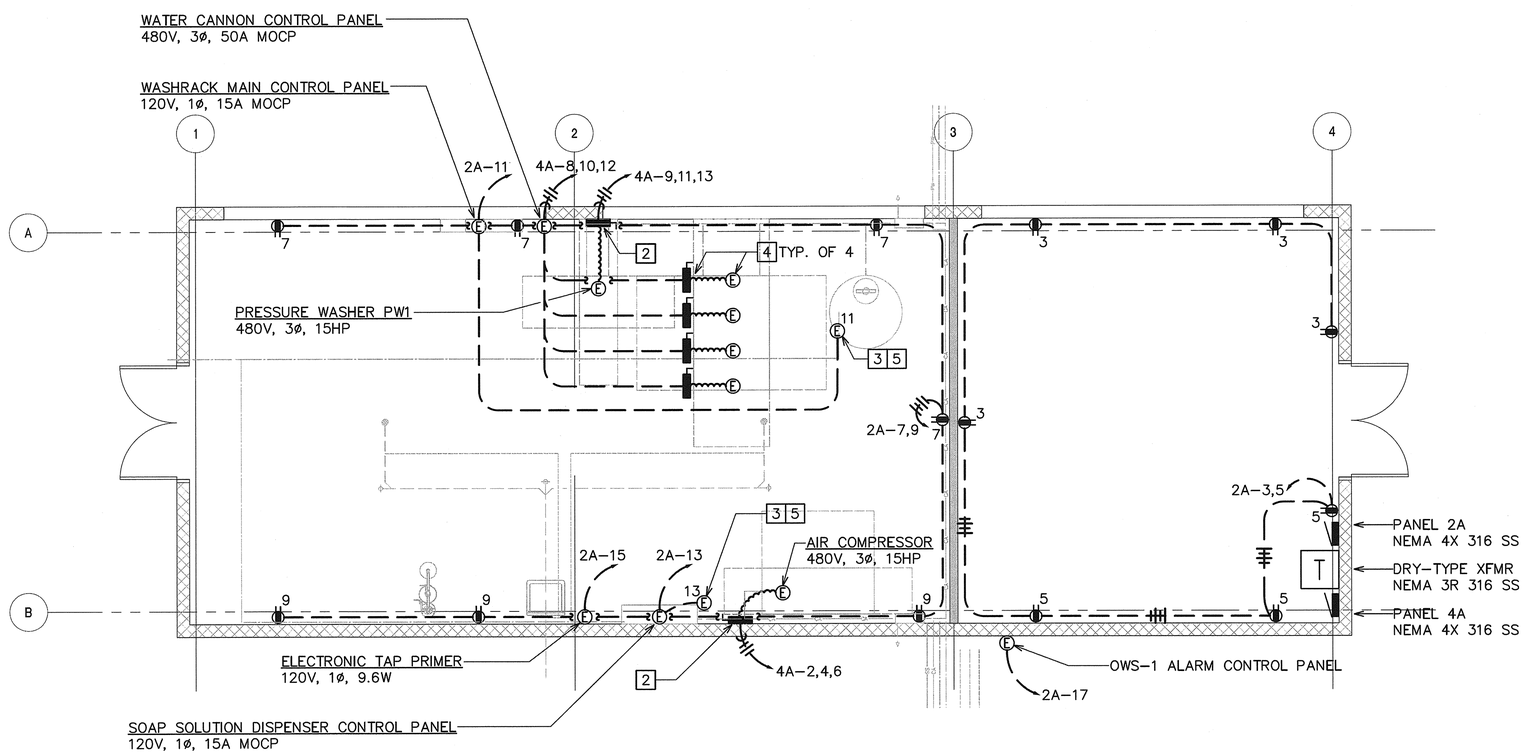

NORTH

EQUIPMENT BUILDING ELECTRICAL PLAN

SCALE: 1/4"=1'-0"

NOTE(S):

1. 3P30A DISC SW, NEMA 4X 316 SS.
2. 3P60A DISC SW, NEMA 4X 316 SS
3. MOTORIZED BALL VALVE.
4. WATER CANNON PUMPS. 3P15A CIRCUIT BREAKERS PROVIDED IN CONTROL PANEL & INSTALLED BY WASH RACK EQUIPMENT SUPPLIER.
5. FURNISHED & INSTALLED BY WASH RACK EQUIPMENT SUPPLIER.

4' 2' 0 4' 8' 12'

SCALE: 1/4"=1'-0"

GRAPHIC SCALE

HAWAII ARMY NATIONAL GUARD

Ronald N.S. Ho and Associates, Inc.

BILLY J. ORNELLAS
LICENSED PROFESSIONAL ENGINEER
No. 11658-E
HAWAII, U.S.A.

4/30/2022
SIGNATURE LICENSE EXPIRES

SYM	DESCRIPTION	DATE	APPR

SUBMITTAL PHASE: BID SET

SUBMITTAL DATE: 03/23/20

DES RY | DRW CAD | CHK BO

STATE OF HAWAII
FACILITY MANAGEMENT OFFICE

DEPARTMENT OF DEFENSE
DESIGN AND PROJECT MANAGEMENT BRANCH

HAWAII ARMY NATIONAL GUARD

KALAELOA
OAHU

ARMY AVIATION
SUPPORT FACILITY BUILDING 30

EQUIPMENT BUILDING ELECTRICAL PLAN

SCALE: AS NOTED

STATE JOB NO. CA-1825-C

FEDERAL PROJECT NO. 15190024

SHEET 53 OF 57

E401

2020-03-19 10:35 AM Z:\ACAD\PROJECTS\219126\E401_219126_New Control Bldg Elec Plan

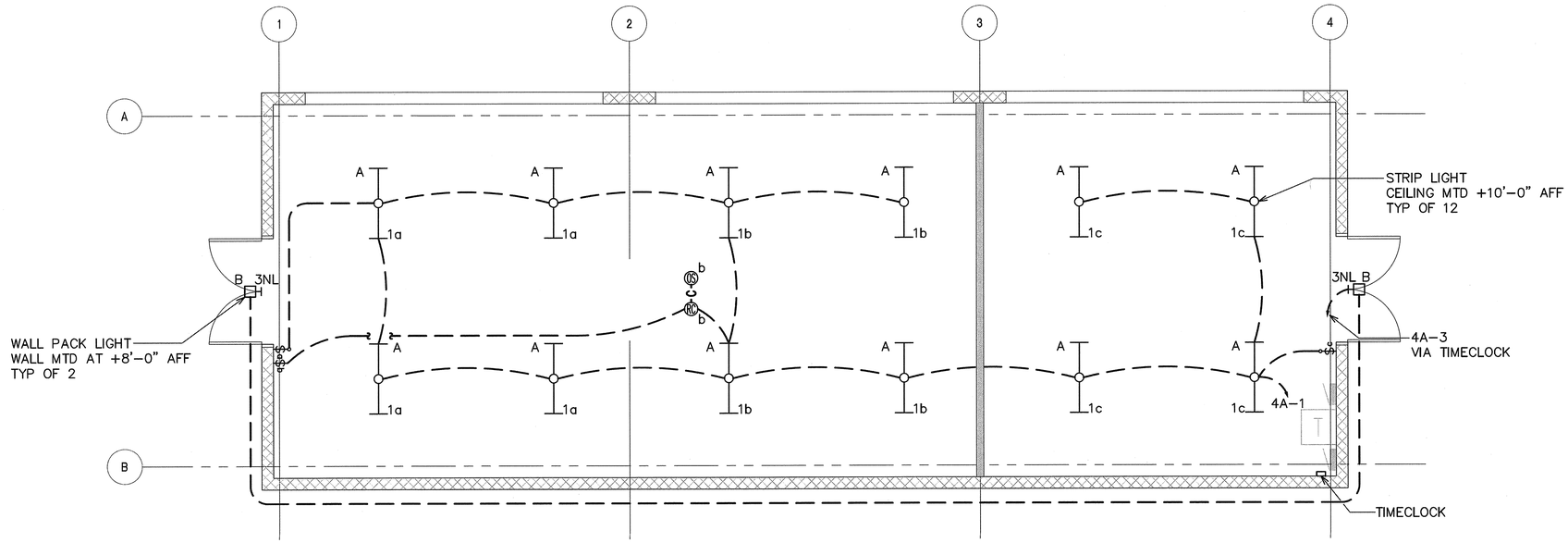

NORTH

EQUIPMENT BUILDING LIGHTING PLAN

SCALE: 1/4"=1'-0"

4' 2' 0 4' 8' 12'

SCALE: 1/4"=1'-0"

GRAPHIC SCALE

HAWAII ARMY NATIONAL GUARD

Ronald N.S. Ho and Associates, Inc.

BILLY J. ORNELLAS
LICENSED PROFESSIONAL ENGINEER
No. 11658-E
HAWAII, U.S.A.

4/30/2022
LICENSE EXPIRES

SYM	DESCRIPTION	DATE	APPR

SUBMITTAL PHASE: BID SET

SUBMITTAL DATE: 03/23/20

DES RY | DRW CAD | CHK BO

DEPARTMENT OF DEFENSE
DESIGN AND PROJECT MANAGEMENT BRANCH

HAWAII ARMY NATIONAL GUARD

STATE OF HAWAII
FACILITY MANAGEMENT OFFICE

KALAELOA
OAHU

ARMY AVIATION
SUPPORT FACILITY BUILDING 30

EQUIPMENT BUILDING LIGHTING PLAN

SCALE: AS NOTED

STATE JOB NO. CA-1825-C

FEDERAL PROJECT NO. 15190024

SHEET 54 OF 57

E501

2020-03-19 10:35 AM Z:\CADD\PROJECTS\219126\E501_219126_New Control Bldg Ltg Plan

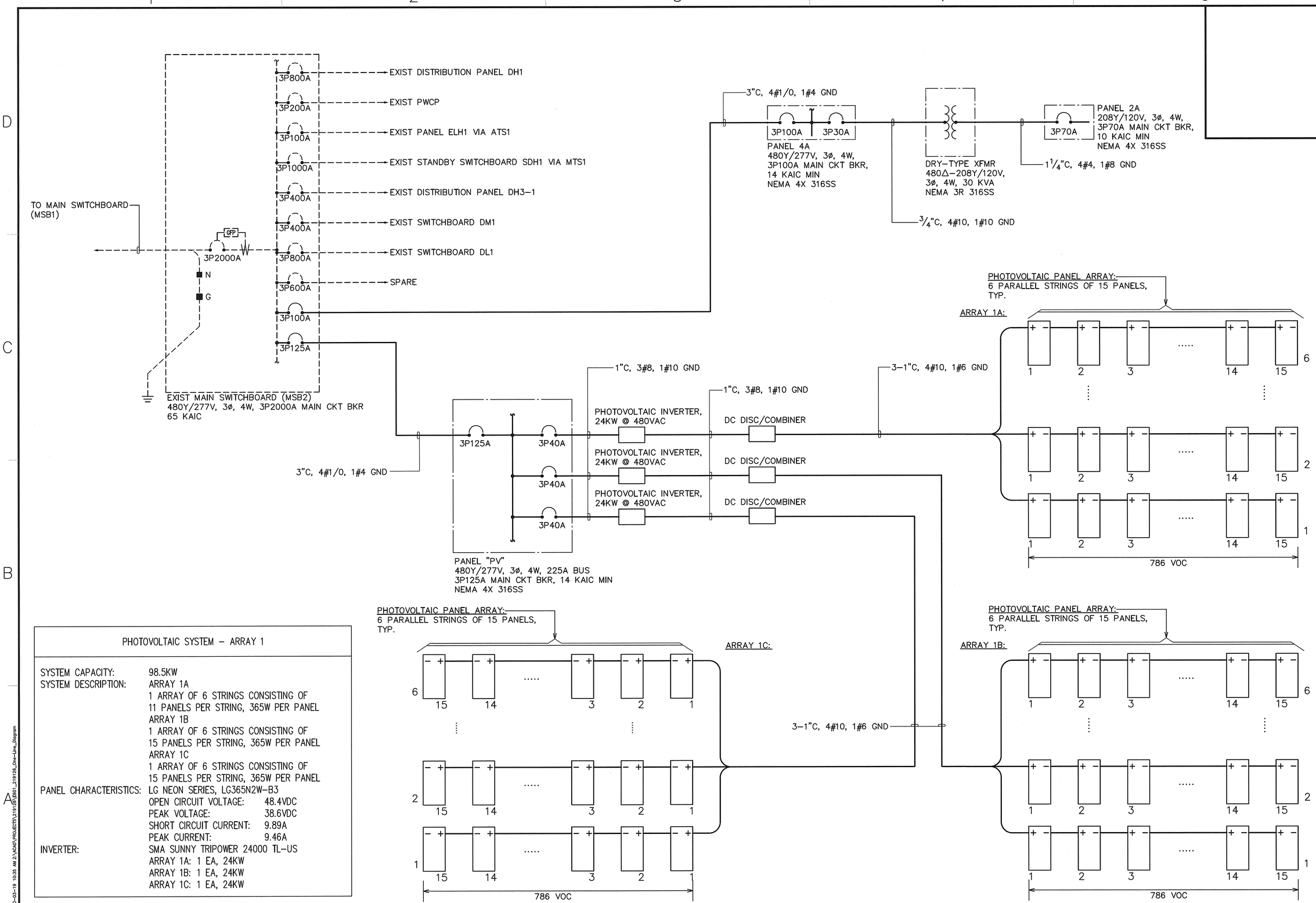

PHOTOVOLTAIC SYSTEM – ARRAY 1	
SYSTEM CAPACITY:	98.5KW
SYSTEM DESCRIPTION:	ARRAY 1A 1 ARRAY OF 6 STRINGS CONSISTING OF 11 PANELS PER STRING, 365W PER PANEL ARRAY 1B 1 ARRAY OF 6 STRINGS CONSISTING OF 15 PANELS PER STRING, 365W PER PANEL ARRAY 1C 1 ARRAY OF 6 STRINGS CONSISTING OF 15 PANELS PER STRING, 365W PER PANEL
PANEL CHARACTERISTICS:	LG NEON SERIES, LG365N2W-B3 OPEN CIRCUIT VOLTAGE: 48.4VDC PEAK VOLTAGE: 38.6VDC SHORT CIRCUIT CURRENT: 9.89A PEAK CURRENT: 9.46A
INVERTER:	SMA SUNNY TRIPOWER 24000 TL-US ARRAY 1A: 1 EA, 24KW ARRAY 1B: 1 EA, 24KW ARRAY 1C: 1 EA, 24KW

HAWAII ARMY NATIONAL GUARD

Ronald N.S. Ho and Associates, Inc.

BILLY J. ORNELLAS
LICENSED PROFESSIONAL ENGINEER
No. 11658-E
HAWAII, U.S.A.
4/30/2022
SIGNATURE LICENSE EXPIRES

SYM	DESCRIPTION	DATE	APPR

SUBMITTAL PHASE: BID SET
SUBMITTAL DATE: 03/23/20
DES RY | DRW CAD | CHK BO

DEPARTMENT OF DEFENSE
DESIGN AND PROJECT MANAGEMENT DIVISION
STATE OF HAWAII
FACILITY MANAGEMENT OFFICE
HAWAII ARMY NATIONAL GUARD
KALAELOA OAHU
ARMY AVIATION SUPPORT FACILITY BUILDING 30
ONE-LINE DIAGRAM

SCALE: AS NOTED
STATE JOB NO. CA-1825-C
FEDERAL PROJECT NO. 15190024
SHEET 55 OF 57
E601

2020-03-19 10:35 AM Z:\ACAD\PROJECTS\219125\E601_219125_One-Line_Diagram

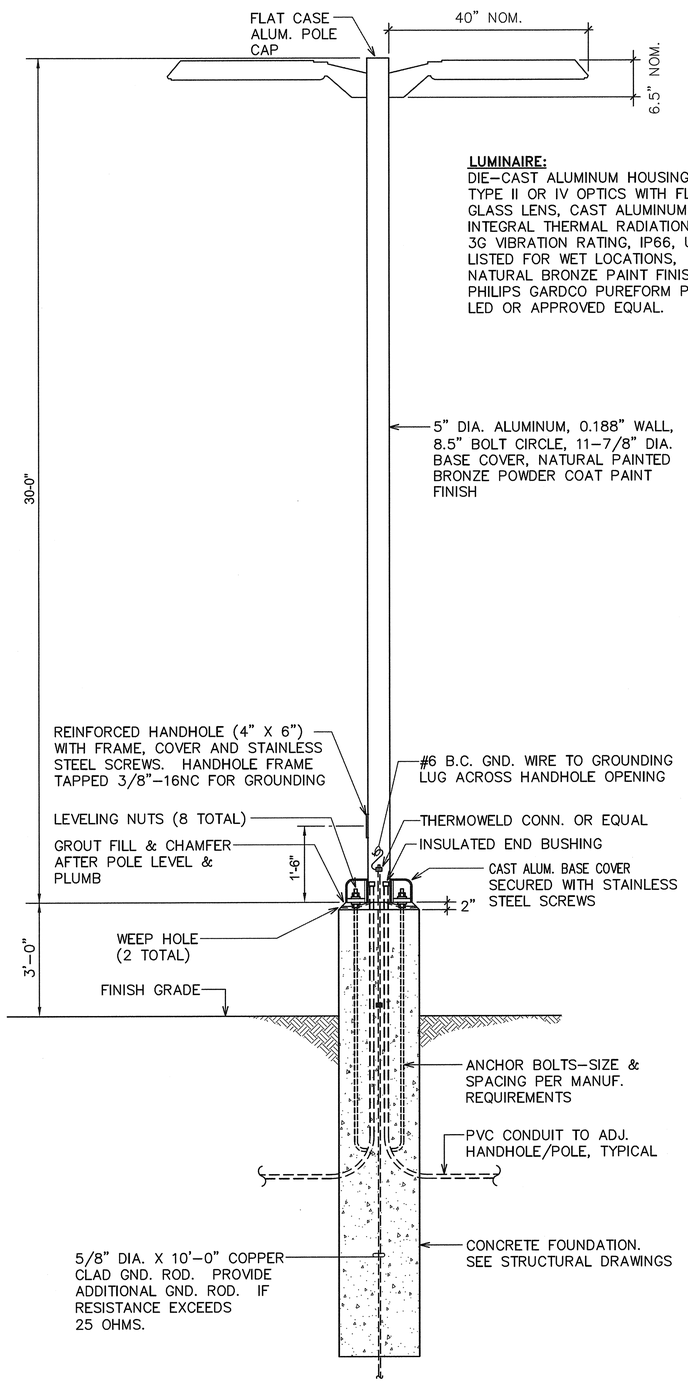

ELEVATION

LUMINAIRE:
DIE-CAST ALUMINUM HOUSING, TYPE II OR IV OPTICS WITH FLAT GLASS LENS, CAST ALUMINUM INTEGRAL THERMAL RADIATION FINS, 3G VIBRATION RATING, IP66, UL LISTED FOR WET LOCATIONS, NATURAL BRONZE PAINT FINISH PHILIPS GARDCO PUREFORM P34 LED OR APPROVED EQUAL.

LIGHT ENGINE "P1" (TYPE II):
414W LED, 3000K,
43,056 LUMENS

LIGHT ENGINE "P2" (TYPE IV):
414W LED, 3000K,
43,114 LUMENS

DRIVER:
INTEGRAL LED DRIVER W/ 10KA SURGE PROTECTION, 120/277V.

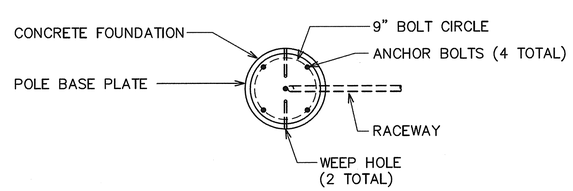

PLAN

1 / E601 PARKING LOT LIGHT POLE DETAIL

NOT TO SCALE

Ronald N.S. Ho and Associates, Inc.

BILLY J. ORNELLAS
LICENSED PROFESSIONAL ENGINEER
No. 11658-E
HAWAII, U.S.A.

4/30/2022
SIGNATURE LICENSE EXPIRES

SYM	DESCRIPTION	DATE	APPR

SUBMITTAL PHASE: BID SET
SUBMITTAL DATE: 03/23/20
DES RY | DRW CAD | CHK BO

DEPARTMENT OF DEFENSE
DESIGN AND PROJECT MANAGEMENT DIVISION
STATE OF HAWAII
FACILITY MANAGEMENT OFFICE
HAWAII ARMY NATIONAL GUARD
KALAELOA OAHU
ARMY AVIATION SUPPORT FACILITY BUILDING 30
LIGHT POLE DETAILS

SCALE: AS NOTED
STATE JOB NO. CA-1825-C
FEDERAL PROJECT NO. 15190024
SHEET 56 OF 57
E602

2020-03-19 10:35 AM Z:\ACAD\PROJECTS\219125\E602_219125_LL_Pole_details

PANEL 4A — 3P100A MAIN CIRCUIT BREAKER, 480Y/277V, 3 PHASE, 4 WIRE, 14,000 A.I.C. MINIMUM INDUSTRIAL-BOLTED TYPE, SURFACE MOUNTED

CKT. NO.	USE: L-LTS, R-RECEP, PFB-PROVISION FUTURE BKR., S-SPARE, F-FAN, W-WARMER	BREAKER POLE	BREAKER AMPS	WIRE SIZE	KVA ON BUSSES PHASE A		PHASE B		PHASE C		WIRE SIZE	BREAKER POLE	BREAKER AMPS	USE: L-LTS, R-RECEP, PFB-PROVISION FUTURE BKR., S-SPARE, F-FAN, W-WARMER	CKT. NO.
1	L - STORAGE BLDG	1	20	12	0.4	5.5					8	3	40	AIR COMPRESSOR 15 HP	2
3	L - STORAGE BLDG EXTERIOR	1	20	12			0.1	5.5			-	-	-	-	4
5	L - WASH RACK POLE	1	20	12					2.5	5.5	-	-	-	-	6
7	L - WASH RACK POLE	1	20	12	2.5	6.3					8	3	50	WATER CANNON CTRL PANEL	8
9	PRESSURE WASHER 15 HP	3	40	8			5.5	6.3			-	-	-	-	10
11	-	-	-	-					5.5	6.3	-	-	-	-	12
13	-	-	-	-	5.5										14
15															16
17															18
19															20
21															22
23															24
25	PANEL 2A XFMR 15 KVA	3	30	10	5.0										26
27	-	-	-	-			5.0								28
29	-	-	-	-					5.0						30
	CONNECTED LOAD PER PHASE				25.2		22.4		24.8						

TOTAL CONNECTED LOAD (KVA)	72.4
DEMAND FACTOR	80%
TOTAL DEMAND FACTOR (KVA)	57.9

NOTES:

PANEL "2A" — 3P70A MAIN BKR, 208Y/120V, 3 PHASE, 4 WIRE 10,000 A.I.C. INDUSTRIAL-BOLTED TYPE, SURFACE MOUNTED

CKT. NO.	USE: L-LTS, R-RECEP, PFB-PROVISION FUTURE BKR., S-SPARE, F-FAN, W-WARMER	BREAKER POLE	BREAKER AMPS	WIRE SIZE	KVA ON BUSSES PHASE A		PHASE B		PHASE C		WIRE SIZE	BREAKER POLE	BREAKER AMPS	USE: L-LTS, R-RECEP, PFB-PROVISION FUTURE BKR., S-SPARE, F-FAN, W-WARMER	CKT. NO.
1	R - WASH RACK PEDESTAL	1	20	12	1.2	0.1					12	1	20	MOTORIZED BUTTERFLY VALVE (MV-1)	2
3	R - STORAGE ROOM	1	20	12			1.0								4
5	R - STORAGE ROOM	1	20	12					0.8						6
7	R - EQUIPMENT ROOM	1	20	12	1.0										8
9	R - EQUIPMENT ROOM	1	20	12			0.8								10
11	WASHRACK MAIN CTRL PANEL	1	15	12					1.0						12
13	SOAP SOLUTION DISPENSER PANEL	1	15	12	1.0										14
15	ELECTRONIC TAP PRIMER	1	15	12			0.1								16
17	OWS-1 ALARM CONTROL PANEL	1	20	12					0.3						18
19															20
21															22
23															24
	CONNECTED LOAD PER PHASE				3.3		1.9		2.1						

TOTAL CONNECTED LOAD (KVA)	7.3
DEMAND FACTOR	90%
TOTAL DEMAND LOAD (KVA)	5.1

NOTES:

LIGHT FIXTURE AND LAMP SCHEDULE

TYPE	MOUNTING	DESCRIPTION	LIGHT ENGINE	MANUFACTURER OR APPROVED EQUAL
P1	POLE LIGHT	40"L X 16.5"W LED AREA LIGHT FIXTURE, TWO PIECE, LOW COPPER, ALUMINUM EXTRUSION MECHANICALLY SECURED WITH STAINLESS STEEL FASTENERS TO LOW COPPER ALUMINUM DIE-CAST ELECTRICAL COMPARTMENT AND END CAP, SILICONE GASKET SEAL, CLEAR ANODIZED UNDERCOAT, MEDIUM GRAY TGIC POLYESTER POWDER COAT FINISH, OPTICAL MODULE IS IP66 16-LED ALUMINUM METAL CLAD BOARD FULLY SEALED OPTIC, 700 mA, 120V, 5 YEAR WARRANTY FOR LEDS, BRACKET MOUNTED TO STAINLESS STEEL PLATE, PROVISION FOR STAINLESS STEEL SAFETY CABLE. TYPE 2 DISTRIBUTION	414W LED, 3000K, 43056 LUMENS, 70 CRI	GARDCO LIGHTING P34-128L-1050-WW-G2-AR-2-TLRPC-RPA-CLA-MGY TRA-CB-30-D2-NA
P2	POLE LIGHT	40"L X 16.5"W LED AREA LIGHT FIXTURE, TWO PIECE, LOW COPPER, ALUMINUM EXTRUSION MECHANICALLY SECURED WITH STAINLESS STEEL FASTENERS TO LOW COPPER ALUMINUM DIE-CAST ELECTRICAL COMPARTMENT AND END CAP, SILICONE GASKET SEAL, CLEAR ANODIZED UNDERCOAT, MEDIUM GRAY TGIC POLYESTER POWDER COAT FINISH, OPTICAL MODULE IS IP66 16-LED ALUMINUM METAL CLAD BOARD FULLY SEALED OPTIC, 700 mA, 120V, 5 YEAR WARRANTY FOR LEDS, BRACKET MOUNTED TO STAINLESS STEEL PLATE, PROVISION FOR STAINLESS STEEL SAFETY CABLE. TYPE 4 DISTRIBUTION	414W LED, 3000K, 43114 LUMENS, 70 CRI	GARDCO LIGHTING P34-128L-1050-WW-G2-AR-4-TLRPC-RPA-CLA-MGY TRA-CB-30-D2-NA
A	SURFACE PENDANT CEILING	48"L x 3-3/16"D CONTINUOUS WHITE POLYCARBONATE EXTRUDED HOUSING, FROSTED POLYCARBONATE DIFFUSER, WHITE PLATIC END CAPS, 50,000 HOUR LEDS AT L80, LED BOARDS AND DRIVERS ACCESSIBLE FOR FUTURE MAINTENANCE AND UPGRADES, MODULAR REPLACEABLE LED COMPONENTS, 5 YEAR WARRANTY, 120-277VV.	32W LED, 3500K, 3653 LUMENS, 80 CRI	DAYBRITE LIGHTING FSX-4-40L-835-UNV-FSXWG4
B	WALL MOUNTED	LED WALL PACK FIXTURE DIE-CAST ALUMINUM HOUSING POWDER COAT FINISH, 45 INPUT WATTS, 18 LEDs, DLC QUALIFIED, UL 1598 FOR USE IN WET LOCATIONS, 277V DRIVERS WITH PHOTOCELL OPTION.	18 LEDs, 45W, 4200K	HUBBELL LNC2-18LU-4K3-5-PC(277)
C	SURFACE PENDANT CEILING	54"L x 4-1/8"D FROSTED POLYCARBONATE EXTRUDED HOUSING WITH CONTINUOUS POURED IN PLACE, CLOSED-CELL GASKET, 20-GAUGE STEEL CHANNEL & COVER. CAPTIVE, TEMPER-RESISTANT, POLYCARBONATE LATCHES, WET-LOCATION RATED. INTERGRAL 360 MOTION SENSOR, WET LOCATION, ON/OFF OPERATION WITH OVERRIDE OFF DUE TO DAYLIGHT, 60,000 HOUR LEDS AT L88, 5 YEAR WARRANTY, 120-277VV.	33W LED, 3500K, 3777 LUMENS, 80 CRI	LITHONIA LIGHTING VAP-4000LM-FST-WD-MVOLT-35K-80CRI-SBOR 10 OEX EB4 WH

Ronald N.S. Ho and Associates, Inc.

BILLY J. ORNELLAS LICENSED PROFESSIONAL ENGINEER No. 11658-E HAWAII, U.S.A.

4/30/2022
SIGNATURE LICENSE EXPIRES

SYM	DESCRIPTION	DATE	APPR

SUBMITTAL PHASE: BID SET

SUBMITTAL DATE: 03/23/20

DES RY | DRW CAD | CHK BO

STATE OF HAWAII FACILITY MANAGEMENT OFFICE

DEPARTMENT OF DEFENSE DESIGN AND PROJECT MANAGEMENT BRANCH

HAWAII ARMY NATIONAL GUARD

KALAELOA OAHU

ARMY AVIATION SUPPORT FACILITY BUILDING 30

PANEL SCHEDULES, LIGHT FIXTURE SCHEDULE

SCALE: AS NOTED

STATE JOB NO. CA-1825-C

FEDERAL PROJECT NO. 15190024

SHEET 57 OF 57

E603

2020-03-19 10:34 AM Z:\ACAD\PROJECTS\219128\E603_219128_Panel_Sch